NOTICE OF PUBLIC MEETING

The Lewis and Clark County Commissioners Public Meeting will be held on Thursday, March 6, 2025, at 9:00 AM in Commission Chambers, Room 330.

It is the policy of the Board of County Commissioners to render a decision at a later date after they have had ample time to consider all oral and written public testimony. The BoCC may render a final decision on the same date if substantial new information is not received. Public comment must be limited to matters under the jurisdiction of the Commission.

1. **Pledge of Allegiance**
2. **Consent Action Items**
3. **Bid Opening. Generator Replacement. (Jenny Chambers)**

   The Commissioners will consider opening the bids.
4. **Bid Award. Rimini Water Distribution Services Invitation for Bids. (Casey Hayes)**

   The Commissioners will consider awarding the bid.
5. **Public comment on any public matter within the jurisdiction of the Commission that is not on the agenda above.**
6. **Adjourn**

ADA NOTICE

Lewis and Clark County is committed to providing access to persons with disabilities for its meetings, in compliance with Title II of the Americans with Disabilities Act and the Montana Human Rights Act. The County will not exclude persons with disabilities from participation at its meetings or otherwise deny them County's services, programs, or activities. Persons with disabilities requiring accommodations to participate in the County's meetings, services, programs, or activities should contact Keni Grose, as soon as possible to allow sufficient time to arrange for the requested accommodation, at any of the following:

- **(406)-447-8316**
- **kgrose@lccountymt.gov**
- **TTY Relay Service 1-800-253-4091 or 711**
- **316 N Park, Room 303**

Bid Opening. Generator Replacement. (Jenny Chambers)

Presented By:

Summary:
The Commissioners will consider opening the bids.

Legal Review Required:

ATTACHMENTS:

Description	Type
Legal Ad - Generator Bid	Attachment

Lewis and Clark County, Montana
Invitation for Bids
Generator Replacement

Notice is hereby given that the Board of County Commissioners of Lewis and Clark County, Montana is soliciting competitive bids from interested parties to replace a generator and automatic transfer switch for a county-owned building that is operated as a health and medical facility.

The complete solicitation is available online at https://www.lccountymt.gov/Government/Grants-and-Purchasing/Bids-and-Proposals-Current. Questions related to this solicitation must be directed only to the designated point of contact for this solicitation: Jade Wills, Administrative Assistant II, jwills@lccountymt.gov. A cone of silence is established for this solicitation which prohibits any bidder, or entity with financial interest in the bid award, from communicating regarding the solicitation with any Lewis and Clark County elected official, employee, or agent other than the designated point of contact.

A pre-bid conference and tour will be held on Thursday, February 20, 2025, at 3:00 p.m. at the Michael A. Murray Building north entrance, 1930 9th Avenue, Helena, MT. Interested bidders are encouraged to attend.

The deadline for bids to be delivered to the Lewis and Clark County Commissioner's Office, located at the City-County Administrative Building, 316 North Park Avenue, Room 345, Helena, MT is on or before 4:00 PM local time on Wednesday, March 5, 2025. The sealed envelope containing the bid must be labeled, "Generator Replacement Bid Enclosed." Bids received by this deadline will be unsealed publicly on Thursday, March 6, 2025, beginning at 9:00 AM local time in Room 330 of the City-County Administrative Building. Late bids are not accepted.

All bids must be accompanied by a bid bond or other form of security as specified in Montana Code Annotated 18-1-203, payable to Lewis and Clark County, in an amount of no less than ten percent (10%) of the total bid. Bids received without the required bid security will be deemed nonresponsive.

The successful bidder shall furnish an approved performance bond and labor and materials payment bond each in the amount of one hundred percent (100%) of the contract amount.

Bids will be considered based on the most responsive and responsible bid submitted along with the following criteria: purchase price, delivery date, warranty, and specifications.

Insurances, permits, and licenses shall be obtained by the successful bidder and certificates of such shall be provided to Lewis and Clark County.

The contractor and any of the subcontractors bidding or doing work on this project will be required to be registered with the Montana Department of Labor and Industry. Forms and registration information are available from this agency. All workers employed by the contractor or subcontractors in performance of this contract shall be paid wages as required by the current Montana Prevailing Wage Rates. The contractor must ensure that employees and applicants for employment are not discriminated against because of their race, color, religion, sex or national origin.

Small business enterprises (SBE), minority business enterprises (MBE), women business enterprises (WBE), veteran businesses enterprises (VBE), and disadvantaged business enterprises (DBE) are encouraged to participate in this solicitation.

The County reserves the right to reject any or all bids received, to waive informalities, to postpone the award of the solicitation for a period not to exceed 60 days, and to accept the bid that is in the best interest of the County. Bidders shall be bound to the terms and conditions listed in the solicitation.

This solicitation is being offered in accordance with federal and state statutes and county regulations governing procurement. Bids become the property of Lewis and Clark County. The County is not responsible for costs associated with preparing a bid.

Published in the Helena Independent Record on Saturday, February 8, 2025, and Saturday, February 15, 2025.

TABLE OF CONTENTS

Standard Terms and Conditions	Page 4
Specific Terms and Conditions	Page 8
Bid Proposal Worksheet	Page 9
Funding Agency Special Provisions	Exhibit A
Prevailing Wage Rates	Exhibit B
Lewis and Clark County Independent Contractor Contract	Exhibit C
Project Specifications	Appendix A
Project Drawings - Generator	Appendix B
Project Drawings - Concrete Pad Section	Appendix C

Examination of Specifications and Site of Work

Prospective Bidders shall make a careful examination of the site of the Project, improvements to be protected, disposal sites for surplus materials not designated to be salvaged materials, as to methods of providing ingress and egress to property and methods of handling traffic during construction of the entire Project.

Bidders, including both the General Contractor as well as Subcontractors are required, before submitting any proposal, to read all of the specifications, proposal, contract, and bond forms carefully, to visit the site of the work, to examine carefully the local conditions, to inform themselves of the difficulties to be encountered, and judge for themselves of the accessibility of the work, and all attending circumstances affecting the cost of the work, or time required to make an intelligent proposal.

No information given by the Owner or any officials thereof, other than that contained in the specifications, proposal, and other documents, shall be binding upon the Owner. Bidders shall rely upon their own estimates, investigations, tests, and other data which are necessary for full and complete information upon which the proposal may be based. It is mutually agreed that submission of a proposal is evidence that the Bidder has made the examinations, will enter into the usual contract with the Owner.

Standard Terms and Conditions:

By submitting a bid to this Invitation for Bids, the Bidder agrees to acceptance of the following Standard Terms and Conditions and any other provisions that are specific to this solicitation.

1. Competition. Lewis and Clark County encourages free and open competition among bidders. Whenever possible, specifications, bid invitations, and conditions are designed to accomplish this objective, consistent with the necessity to satisfy the County's needs and accomplishment of a sound economical operation.

   The bidder's signature on this proposal guarantees that the prices quoted have been established without collusion with other eligible bidders and without effort to preclude Lewis and Clark County from obtaining the lowest possible competitive price.

   Prior to the Notice of Intent to Award, bids may be held by Lewis and Clark County for a period not to exceed 60 days from the date of the opening of bids for the purpose of reviewing bids and investigating the qualifications of the bidders.

2. Preparation of Bids. Bids will be written in ink and/or typewritten on the bid forms furnished herewith. Erasures and alterations must be initialed by the bidder in ink. No verbal bids shall be accepted. The bidder agrees that the bid shall be good and may not be withdrawn during the 60-day review period.

3. Bid Items. The bidder warrants articles offered to conform to the specifications herein requested, to be fit and sufficient for the purpose manufactured, of good material and workmanship, and free from defect.

4. Special Brands. Brand name items or descriptions used in this proposal are specified solely for the purpose of indicating standards of quality, performance, and/or use desired. Any bid offering goods or sources which deviate from the specifications must be clearly indicated by the bidder. Substitutions must be identified by the manufacturer and stock number and complete descriptive literature must be included with the bid. Goods delivered which do not conform to the contract terms, conditions, or specifications may be rejected and returned at the vendors' expense. Any bid for foreign produced products shall be so indicated and the source of supply noted for each item.

5. Packaging. Unless otherwise stipulated, no charges will be allowed for packing, wrapping, bags, containers, reels, etcetera. All items shall be packed in accordance with prevailing commercial practices and in such a manner as to ensure delivery in good condition and as specified herein.

6. Delivery/Shipping. Goods shall be prepaid, Free on Board (FOB) destination. In the event the contract terms specify FOB shipping point, shipping charges will be prepaid and itemized as a separate item on invoicing. Such shipments shall be via the least expensive common carrier unless otherwise stipulated. Lewis and Clark County reserves the right to reject Cash on Delivery (COD).

7. Warranty. Bidders agree to provide a warranty for product on offer and perform all warranty and maintenance services in a professional and timely manner and acknowledge that they will be liable for any breach of this warranty.

8. Cash Discount. Bidders may quote a cash discount, provided it is based on a period of 60 days or more. A shorter period will not be considered in determination of a low bid. Any cash discount as part of this contract will be computed from the date of receipt of a properly executed claim or the date of completion of delivery of all items in satisfactory condition, whichever is later.

9. Excise Taxes. Lewis and Clark County is exempt from federal excise taxes (FET). Exemption certificates will be furnished upon request.

10. Acceptance/Rejection of Bids. Lewis and Clark County reserves the right to accept or reject any or all bids, wholly or in part, and to make awards in any manner deemed in the best interest of the County.

11. All-or-None Proposals. Bidders may submit alternate proposals on an all-or-none basis but are required to submit a primary quotation on an item-by-item basis to be considered for either type of award.

12. Bid Determination. The basis of the award will be dependent on the most responsible bid submitted with consideration given to the following criteria:
    a. Purchase price;
    b. Delivery date;
    c. Warranty and/or maintenance agreement; and
    d. Analysis and comparison by the county with similar or related equipment.

13. Tabulation. In the event that a quotation is entered in which the unit price and extension do not agree, the unit price shall prevail.

14. Bid Proposal Worksheet. Bidders are required to complete all Bid Proposal Worksheets ~~and must provide a detailed proposed specification packet with the bid~~. Any variance to specifications the bidder wishes to seek consideration for must be clearly stated in the section provided on the Bid Proposal Worksheet.

15. Nondiscrimination. In accordance with federal and state laws, the bidder agrees not to discriminate against any client, employee, or applicant for employment or for services because of race, creed, color, national origin, sex, or age with regard to, but not limited to, the following:
    a. Employment upgrading;
    b. Demotion or transfer;
    c. Recruitment or recruitment advertising;
    d. Lay-offs or terminations;
        i. Rates of pay or other forms of compensation;
        ii. Selection for training; or
        iii. Rendition of services.

    Bidders and the awardee shall comply with all federal, state, and local laws, rules and regulations. Bidders and the awardee and any of the Bidders' and the awardee's sub-grantees, contractors, subcontractors, successors, transferees, and assignees shall comply with Title VI of the Civil Rights Act of 1964, which prohibits recipients of federal financial assistance from excluding from a program or activity, denying benefits of, or otherwise discriminating against a person on the basis of race, color, or national origin (42 U.S.C. § 2000d et seq.), as implemented by the Department of the Treasury's Title VI regulations, 31 CFR Part 22, which are herein incorporated by reference and made a part of this contract (or agreement). Title VI also includes protection to persons with "Limited English Proficiency" in any program or activity receiving federal financial assistance, 42 U.S.C. § 2000d et seq., as implemented by the Department of the Treasury's Title VI regulations, 31 CFR Part 22, which are herein incorporated by reference and made a part of this contract or agreement.

    It is further understood that any vendor who is in violation of this clause shall be barred forthwith from receiving awards of any purchase from Lewis and Clark County unless a satisfactory showing is made that discriminatory practices have ceased, and the recurrence of such acts is unlikely.

16. OSHA and EPA Requirements. The equipment shall meet OSHA and EPA requirements and specifications on the date of the bid opening.

17. Bid Consideration. No bid will be considered unless accompanied by a bid bond, bank draft, money order, or certified check in the amount of not less than ten (10) percent of the total bid.

18. Public Inspection of Bids. Except as otherwise stated in these terms and conditions, all information received in response to this IFB is deemed public information and will be available for public viewing and copying after the Notice of Intent to Award is issued.

19. Trade Secrets. In order for a bidder to claim information is protected under Montana's Uniform Trade Secrets Act, a notarized Affidavit for Trade Secret Confidentiality shall

be provided by the bidder's attorney acknowledging that material included in a bid is open to public inspection except for information that meets the provisions of Montana's Uniform Trade Secrets Act. Trade secrets contained in the bid must be clearly marked and separate from materials that are open for public inspection. Bidders must be prepared to pay all legal costs and fees associated with defending a claim for confidentiality in the event of a records request from another party.

20. Claims of Confidentiality and Personal Safety. In order for a Bidder to claim information is confidential and protected by law or a matter of personal safety, this information must be marked and separated from the materials that are open for public inspection. Clear reference to the laws that protect the information must be provided. No confidentiality material may be contained in the pricing or cost estimates. Contract provisions shall not be covered by claims of confidentiality or personal safety. Bidders will be solely responsible for all legal costs and fees associated with defending a claim for confidentiality and/or personal safety in the event of a records request from another party which the Bidder chooses to oppose. The Bidder will either totally assume all responsibility for the opposition of the request, and all liability and costs of any such defense, thereby defending, protecting, indemnifying, and saving harmless the County or the Bidder will immediately withdraw its opposition to the records request and permit the County to release the documents for examination. The County will inform the Bidder in writing of any open records request that is made, and the Bidder will have three working days from receipt of the notice to notify the County in writing whether the Bidder opposes the request or not. Failure to provide that notice in writing will waive the claim of confidentiality and allow the County to treat the documents as a public record.

21. Cone of Silence. A cone of silence shall be established on all Lewis and Clark County formal solicitation processes. The cone of silence prohibits any communication regarding a formal solicitation between any bidder (or its agents or representatives) or other entity with the potential for a financial interest in the award (or their respective agents or representatives) and any Lewis and Clark County elected official, employee, or agent other than the designated point of contact for the solicitation.

    The cone of silence shall be in effect from the time of posting the formal solicitation on the County's website and until the County issues a Notice of Intent to Award, cancels the solicitation, or otherwise takes action to end the selection process.

    Violations of the cone of silence may be grounds for disqualification from the selection process. The cone of silence shall not apply to communications at any public proceeding or meeting.

22. Advanced Payments. Except as provided in law, provisions requiring payment by the County, fully or in part, for goods or services before receipt of such shall not be authorized.

23. Protest Procedure. A bidder aggrieved in connection with the solicitation or bid award may protest in accordance with the procedure outlined in the Lewis and Clark County procurement policy.

24. Nondiscrimination Against Firearm Entities/Trade Associations. Per Montana Code Annotated 30-20-301, a Bidder whose company has at least ten full-time employees and

is awarded a contract with a value of at least $100,000 paid wholly or partly from public funds shall not have a practice, policy, guidance, or directive that discriminates against a firearm entity or firearm trade association, and the awarded Bidder shall not discriminate during the term of the contract against a firearm entity or firearm trade association.

Specific Terms and Conditions

1. Contractor Registration. Contractor shall be registered in order to bid on this Project. Registration shall be per Montana Code Annotated 39-9-201. All subcontractors whose portion of the work is over $2,500 will be required to submit proof of registration with the Department of Labor and Industry.

2. Permits. Contractor is responsible for obtaining all required permits for construction. Copies of permits must be provided to the Owner prior to demolition.

3. Montana Public Works Standard Specifications. All work shall be done in accordance with Montana Public Works Standard Specifications Seventh Edition (April 2021), and all subsequent addenda.

4. Contractor's Gross Receipts Tax. All contractors or subcontractors working on a public funded project are required to pay or have withheld from earnings one percent (1%) of the gross contract price. This tax applies to public contracts of 80 thousand dollars ($80,000) and above.

5. Montana Prevailing Wage Rates. All employees employed on the Project will be paid wages at rates as may be required by the laws of the State of Montana in accordance with Montana Prevailing Wage Rates for Building Construction 2025 established by the Montana Department of Labor and Industry.

6. Certified Payroll Requirements. Contractor must submit certified payrolls for all employees and employees of subcontractors within one week of issuing each respective payroll. Certified payrolls must be numbered sequentially and submitted on a weekly basis whether or not work was performed. If no work was performed, the Contractor should note this on the payroll.

7. Performance and Payment Bonds. The successful Contractor shall furnish an approved Performance Bond and a Labor and Materials Payment Bond, each in the amount of one hundred percent (100%) of the contract amount.

8. Insurance Requirements. Contractor agrees to maintain general liability insurance from an insurance carrier licensed to do business in the State of Montana in the amount of one million dollars ($1,000,000) for each occurrence (minimum) and two million dollars ($2,000,000.00) aggregate. Lewis and Clark County must be listed as an additional insured on the general liability insurance certificate.

   Contractor also agrees to maintain workers compensation insurance from an insurance carrier licensed to do business in the State of Montana. Proof of general liability and workers compensation insurance shall be provided prior to commencing Project.

BID PROPOSAL WORKSHEET

Return To: Lewis and Clark County
Board of County Commissioners
316 N. Park Avenue, Room 345
Helena, MT 59623

Bids must be submitted no later than Wednesday, March 5, 2025, by 4:00 p.m. local time.

THE UNDERSIGNED BIDDER has become familiar with the Project solicited by Lewis and Clark County through the Specifications. The Bidder agrees to follow and abide by all laws required in the State of Montana and Lewis and Clark County. The Bidder, having satisfied themself of the Project, does submit the offer as follows:

THE BIDDER HEREBY PROPOSES AND AGREES, if this offer is accepted, to enter into a Contract and assumes all obligations, duties, and responsibilities specified herein for the following unit prices and lump sum.

BASE BID

ITEM #	ITEM DESCRIPTION	TOTAL
1	Generator Replacement	$
BID PRICE WRITTEN IN WORDS:		

ADDITIVE ALTERNATE #1

ITEM #	ITEM DESCRIPTION	TOTAL
1	5-Year Comprehensive Warranty	$
BID PRICE WRITTEN IN WORDS:		

ADDITIVE ALTERNATE #2

ITEM #	ITEM DESCRIPTION	TOTAL
1	10-Year Comprehensive Warranty	$
BID PRICE WRITTEN IN WORDS:		

BID PROPOSAL WORKSHEET

Earliest Possible Start Date: _____

Number of Construction Days: _____

THE UNDERSIGNED BIDDER HEREBY CERTIFIES THAT:

1. This offer is genuine and is not made in the interest of, or on the behalf of, any undisclosed person or firm, and is not submitted as a result of any agreement with any association, corporation, or group.

2. The Bidder has not directly or indirectly induced or solicited any other bidder to put in a false or sham offer.

3. The Bidder has not solicited or induced any person or firm to refrain from bidding.

4. The Bidder has not sought by collusion to obtain any advantage over any other bidder or over Lewis and Clark County.

5. The Bidder, has examined and carefully studied the Bidding Documents and any data and reference items identified in the Bidding Documents and hereby acknowledges receipt of the following addenda (if applicable).

Addendum Number:	Addendum Date:
_____	_____
_____	_____

BID PROPOSAL WORKSHEET

Business Legal Name: _____ Phone: _____

Contact Person: _____ E-Mail: _____

Address: _____ Federal Tax ID#: _____

City, State, Zip: _____ Federal UEI #: _____

Contractor Reg. #: _____

Signature of authorized company official approving the bid as submitted:

Name: _____

Title: _____

Date: _____

_____
Authorized Company Official Signature

_____
Notary Signature

(Notary Seal)

EXHIBIT A

FUNDING AGENCY SPECIAL PROVISIONS

EXHIBIT

The contract to which this addendum is attached is made using federal assistance provided to Lewis and Clark County by the US Department of Treasury under the American Rescue Plan Act ("ARPA"), Sections 602(b) and 603(b) of the Social Security Act, Pub. L. No. 117-2 (March 11, 2021).

The following terms and conditions apply to the CONTRACTOR, as a contractor of Lewis and Clark County, according to the County's Award Terms and Conditions signed on June 15, 2021; by ARPA and its implementing regulations; and as established by the Treasury Department.

1. **Equal Opportunity.** CONTRACTOR shall comply with Executive Order 11246, "Equal Employment Opportunity," as amended by EO 11375, "Amending Executive Order 11246 Relating to Equal Employment Opportunity," and as supplemented by regulations at 41 CFR part 60, "Office of Federal Contract Compliance Programs, Equal Employment Opportunity, Department of Labor."

2. **Minority and Women Business Enterprises.** CONTRACTOR hereby agrees to comply with the following when applicable: The requirements of Executive Orders 11625 and 12432 (concerning Minority Business Enterprise), and 12138 (concerning Women's Business Enterprise), *when applicable.* Accordingly, CONTRACTOR hereby agrees to take affirmative steps to assure that women and minority businesses are utilized when possible as sources of supplies, equipment, construction and services. Affirmative steps shall include the following:
    a. Including qualified women's business enterprises and small and minority businesses on solicitation lists;
    b. Assuring that women's enterprises and small and minority businesses are solicited whenever they are potential sources;
    c. When economically feasible, dividing total requirements into smaller tasks or quantities so as to permit maximum participation by small and minority business, and women's business enterprises;
    d. Where the requirement permits, establishing delivery schedules which will encourage participation by women's business enterprises and small and minority business;
    e. Using the services and assistance of the Small Business Administration, and the U.S. Office of Minority Business Development Agency of the Department of Commerce; and
    f. If any subcontracts are to be let, requiring the prime Contractor to take the affirmative steps in a through e above.

    For the purposes of these requirements, a Minority Business Enterprise (MBE) is defined as an enterprise that is at least 51 percent owned and controlled in its daily operation by members of the following groups: Black, Hispanic, Asian or Pacific Islander, American Indian, or Alaskan Natives. A Women Business Enterprise (WBE) is defined as an enterprise that is at least 51 percent owned and controlled in its daily operation by women.

3. **Suspension and Debarment.** This contract is a covered transaction for purposes of 2 CFR pt. 180 and 2 CFR pt. 3000. As such, the CONTRACTOR is required to verify that none of CONTRACTOR's principals (defined at 2 CFR § 180.995) or its affiliates (defined at 2 CFR § 180.905) are excluded (defined at 2 CFR § 180.940) or disqualified (defined at 2 CFR § 180.935).

The CONTRACTOR must comply with 2 CFR pt. 180, subpart C and 2 CFR pt. 3000, subpart C, and must include a requirement to comply with these regulations in any lower tier covered transaction it enters into.

This certification is a material representation of fact relied upon by Lewis and Clark County. If it is later determined that the CONTRACTOR did not comply with 2 CFR pt. 180, subpart C and 2 CFR pt. 3000, subpart C, in addition to remedies available to the County, the Federal Government may pursue available remedies, including but not limited to suspension and/or debarment.

The CONTRACTOR agrees to comply with the requirements of 2 CFR pt. 180, subpart C and 2 CFR pt. 3000, subpart C while this offer is valid and throughout the period of any contract that may arise from this offer. The CONTRACTOR further agrees to include a provision requiring such compliance in its lower tier covered transactions.

4. **Byrd Anti-Lobbying Amendment, 31 U.S.C. § 1352, as amended*.** CONTRACTOR certifies that it will not and has not used Federal appropriated funds to pay any person or organization for influencing or attempting to influence an officer or employee of any agency, a Member of Congress, officer or employee of Congress, or an employee of a Member of Congress in connection with obtaining any Federal contract, grant, or any other award covered by 31 U.S.C. § 1352. CONTRACTOR shall also disclose any lobbying with non-Federal funds that takes place in connection with obtaining any Federal award. Such disclosures are forwarded from tier to tier up to the recipient who in turn will forward the certification(s) to the awarding agency.

   *****Purchases over $100,000 - CONTRACTOR must sign the certification on the last page of this exhibit.

5. **Access to Records.** The CONTRACTOR agrees to provide the Lewis and Clark County, the U.S. Department of Treasury, the Comptroller General of the United States, or any of their authorized representatives access to any books, documents, papers, and records of the CONTRACTOR which are directly pertinent to this contract for the purposes of making audits, examinations, excerpts, and transcriptions. The CONTRACTOR agrees to permit any of the foregoing parties to reproduce by any means or to copy excerpts and transcriptions as reasonably needed and agrees to cooperate with all such requests.

   The CONTRACTOR agrees to provide the Treasury Department or authorized representatives access to construction or other work sites pertaining to the work being completed under the contract.

   No language in this contract is intended to prohibit audits or internal reviews by the Treasury Department or the Comptroller General of the United States.

6. **Rights to Inventions Made Under a Contract or Agreement.** Contracts or agreements for the performance of experimental, developmental, or research work shall provide for the rights of the Federal Government and the recipient in any resulting invention in accordance with 37 CFR part 401, "Rights to Inventions Made by Nonprofit Organizations and Small Business Firms Under Government Grants, Contracts and Cooperative Agreements," and any applicable implementing regulations.

7. **Contract Work Hours and Safety Standards Act (40 U.S.C. 327 through 333). (Applies**

only to purchases over $100,000, when laborers or mechanics are used.) Where applicable, all contracts in excess of $100,000 that involve the employment of mechanics or laborers shall include a provision for compliance with 40 U.S.C. 3702 and 3704 of the Contract Work Hours and Safety Standards Act, as supplemented by Department of Labor regulations (29 CFR part 5). Under Section 3702 of the Act, each contractor shall be required to compute the wages of every mechanic and laborer on the basis of a standard workweek of 40 hours. Work in excess of the standard workweek is permissible provided that the worker is compensated at a rate of not less than 1 1/2 times the basic rate of pay for all hours worked in excess of 40 hours in the workweek. The requirements of 40 U.S.C. 3704 are applicable to construction work and provides that no laborer or mechanic shall be required to work in surroundings or under working conditions which are unsanitary, hazardous or dangerous. These requirements do not apply to the purchases of supplies or materials or articles ordinarily available on the open market, or contracts for transportation or transmission of intelligence.

8. **Clean Air Act & Federal Water Pollution Control Act. (applies to purchases of more than $150,000.).** The CONTRACTOR agrees to comply with all applicable standards, orders or regulations issued pursuant to the Clean Air Act, as amended, 42 U.S.C. § 7401 et seq.

   The CONTRACTOR agrees to comply with all applicable standards, orders, or regulations issued pursuant to the Federal Water Pollution Control Act, as amended, 33 U.S.C. 1251 et seq.

   The CONTRACTOR agrees to report each violation of the Clean Air Act and the Water Pollution Control Act to the Lewis and Clark County and understands and agrees that the County will, in turn, report each violation as required to assure notification to the Federal Emergency Management Agency, and the appropriate Environmental Protection Agency Regional Office.

   CONTRACTOR agrees to include these requirements in each subcontract exceeding $150,000 financed in whole or in part with Federal assistance.

9. **Prohibition on certain telecommunications and video surveillance services or equipment (Huawei and ZTE).** CONTRACTOR is prohibited from obligating or expending loan or grant funds to:
   a. Procure or obtain;
   b. Extend or renew a contract to procure or obtain; or
   c. Enter into a contract (or extend or renew a contract) to procure or obtain equipment, services, or systems that uses covered telecommunications equipment or services as a substantial or essential component of any system, or as critical technology as part of any system. As described in Public Law 115–232, section 889, covered telecommunications equipment is telecommunications equipment produced by Huawei Technologies Company or ZTE Corporation (or any subsidiary or affiliate of such entities).
      i. For the purpose of public safety, security of government facilities, physical security surveillance of critical infrastructure, and other national security purposes, video surveillance and telecommunications equipment produced by Hytera Communications Corporation, Hangzhou Hikvision Digital Technology Company, or Dahua Technology Company (or any subsidiary or affiliate of such entities).

ii. Telecommunications or video surveillance services provided by such entities or using such equipment.
iii. Telecommunications or video surveillance equipment or services produced or provided by an entity that the Secretary of Defense, in consultation with the Director of the National Intelligence or the Director of the Federal Bureau of Investigation, reasonably believes to be an entity owned or controlled by, or otherwise connected to, the government of a covered foreign country.

10. **Procurement of Recovered Materials: (applies only if the work involves the use of materials).** In the performance of this contract, the CONTRACTOR shall make maximum use of products containing recovered materials that are EPA-designated items unless the product cannot be acquired:
    a. Competitively within a timeframe providing for compliance with the contract performance schedule;
    b. Meeting contract performance requirements; or
    c. At a reasonable price.

    Information about this requirement, along with the list of EPA- designated items, is available at EPA's Comprehensive Procurement Guidelines web site, https://www.epa.gov/smm/comprehensive- procurement-guideline-cpg-program.

    The CONTRACTOR also agrees to comply with all other applicable requirements of Section 6002 of the Solid Waste Disposal Act.

11. **Publications.** Any publications produced with funds from this award must display the following language: "This project [is being] [was] supported, in whole or in part, by federal award number SLFRP4035 awarded to Lewis and Clark County by the U.S. Department of the Treasury."

12. **Increasing Seat Belt Use in the United States.** Pursuant to Executive Order 13043, 62 FR 19217 (Apr. 18, 1997), CONTRACTOR is encouraged to adopt and enforce on-the-job seat belt policies and programs for your employees when operating company-owned, rented or personally owned vehicles.

13. **Reducing Text Messaging While Driving.** Pursuant to Executive Order 13513, 74 FR 51225 (Oct. 6, 2009), CONTRACTOR is encouraged to adopt and enforce policies that ban text messaging while driving and establish workplace safety policies to decrease accidents caused by distracted drivers.

14. **Title VI of the Civil Rights Act of 1964 – Protections to persons with Limited English Proficiency.** The CONTRACTOR and any of the CONTRACTOR's sub-grantees, contractors, subcontractors, successors, transferees, and assignees shall comply with Title VI of the Civil Rights Act of 1964, which prohibits recipients of federal financial assistance from excluding from a program or activity, denying benefits of, or otherwise discriminating against a person on the basis of race, color, or national origin (42 U.S.C. § 2000d et seq.), as implemented by the Department of the Treasury's Title VI regulations, 31 CFR Part 22, which are herein incorporated by reference and made a part of this contract (or agreement). Title VI also includes protection to persons with "Limited English Proficiency" in any program or activity receiving federal financial assistance, 42 U.S.C. § 2000d et seq., as implemented by the Department of the Treasury's Title VI regulations, 31 CFR Part 22,

which are herein incorporated by reference and made a part of this contract or agreement.

15. **Drug-Free Workplace.** The Drug-Free Workplace Act of 1988 (41 U.S.C. § 701 et seq.) requires that all organizations receiving grants from any Federal agency agree to maintain a drug-free workplace. You as the recipient must comply with drug-free workplace requirements in Subpart B (or Subpart C, if the recipient is an individual) of part 382, which adopts the Governmentwide implementation (2 CFR §182) of sec. 5152-5158 of the Drug-Free Workplace Act of 1988 (Pub. L. 100-690, Title V, Subtitle D; 41 U.S.C. 701-707). By signing the application, the AOR agrees that the recipient will provide a drug-free workplace and will comply with the requirement to notify SAMHSA if an employee is convicted of violating a criminal drug statute. Failure to comply with these requirements may be cause for debarment. Government wide requirements for Drug-Free Workplace for Financial Assistance are found in 2 CFR § 182; HHS implementing regulations are set forth in 2 CFR § 382.400.

16. **Mandatory Disclosures.** Consistent with 45 CFR § 75.113, applicants and recipients must disclose in a timely manner, in writing to the COUNTY, all information related to violations, or suspected violations, of Federal criminal law involving fraud, bribery, or gratuity violations potentially affecting the Federal award. Subrecipients must disclose, in a timely manner, in writing to the COUNTY all information related to violations, or suspected violations, of Federal criminal law involving fraud, bribery, or gratuity violations potentially affecting the Federal award. Failure to make required disclosures can result in any of the remedies described in 45 CFR § 75.371 – Remedies for noncompliance, including suspension or debarment (see 2 CFR §§ 180 & 376 and 31 U.S.C. 3321).

17. **Trafficking Victims Protection Act of 2000 (22 U.S.C. 7104(G)), as amended, and 2 CFR § 175.** The Trafficking Victims Protection Act of 2000 authorizes termination of financial assistance provided to a private entity, without penalty to the Federal government, if the recipient or subrecipient engages in certain activities related to trafficking in persons. SAMHSA may unilaterally terminate this award, without penalty, if a private entity recipient, or a private entity subrecipient, or their employees:

    a) Engage in severe forms of trafficking in persons during the period of time that the award is in effect;

    b) Procure a commercial sex act during the period of time that the award is in effect; or,

    c) Use forced labor in the performance of the award or subawards under the award.

- This form is required only for purchases of more than $100,000 -

31 CFR Part 21 – New Restrictions on Lobbying - CERTIFICATION REGARDING LOBBYING

The undersigned certifies, to the best of their knowledge and belief, that:

1. No Federal appropriated funds have been paid or will be paid, by or on behalf of the undersigned, to any person for influencing or attempting to influence an officer or employee of an agency, a Member of Congress, an officer or employee of Congress, or an employee of a Member of Congress in connection with the awarding of any Federal contract, the making of any Federal grant, the making of any Federal loan, the entering into of any cooperative agreement, and the extension, continuation, renewal, amendment, or modification of any Federal contract, grant, loan, or cooperative agreement.

2. If any funds other than Federal appropriated funds have been paid or will be paid to any person for influencing or attempting to influence an officer or employee of any agency, a Member of Congress, an officer or employee of Congress, or an employee of a Member of Congress in connection with this Federal contract, grant, loan, or cooperative agreement, the undersigned shall complete and submit Standard Form-LLL, "Disclosure Form to Report Lobbying," in accordance with its instructions.

3. The undersigned shall require that the language of this certification be included in the award documents for all subawards at all tiers (including subcontracts, subgrants, and contracts under grants, loans, and cooperative agreements) and that all contractors shall certify and disclose accordingly.

This certification is a material representation of fact upon which reliance was placed when this transaction was made or entered into. Submission of this certification is a prerequisite for making or entering into this transaction imposed by section 1352, title 31, U.S. Code. Any person who fails to file the required certification shall be subject to a civil penalty of not less than $10,000 and not more than $100,000 for each such failure.

The CONTRACTOR certifies or affirms the truthfulness and accuracy of each statement of its certification and disclosure, if any. In addition, the CONTRACTOR understands and agrees that the provisions of 31 U.S.C. Ch. 38, Administrative Remedies for False Claims and Statements, apply to this certification and disclosure, if any.

_____ Date: _____

Signature of CONTRACTOR's
authorized official

_____

(Print name of person signing above)

_____

(Print title of person signing above)

EXHIBIT B

PREVAILING WAGE RATES

MONTANA
PREVAILING WAGE RATES FOR BUILDING CONSTRUCTION SERVICES 2025

Effective: January 11, 2025

Greg Gianforte, Governor
State of Montana

Sarah Swanson, Commissioner
Department of Labor & Industry

To obtain copies of prevailing wage rate schedules, or for information relating to public works projects and payment of prevailing wage rates, visit ESD at erd.dli.mt.gov/labor-standards or contact:

Employment Standards Division
Montana Department of Labor and Industry
P. O. Box 8011
Helena, MT 59604
Phone 406-444-6543

The department welcomes questions, comments, and suggestions from the public. In addition, we'll do our best to provide information in an accessible format, upon request, in compliance with the Americans with Disabilities Act.

MONTANA PREVAILING WAGE REQUIREMENTS

The Commissioner of the Department of Labor and Industry, in accordance with Sections 18-2-401 and 18-2-402 of the Montana Code Annotated (MCA), has determined the standard prevailing rate of wages for the occupations listed in this publication.

The wages specified herein control the prevailing rate of wages for the purposes of Section 18-2-401, et seq., MCA. It is required each employer pay (as a minimum) the rate of wages, including fringe benefits, travel allowance, zone pay and per diem applicable to the district in which the work is being performed as provided in the attached wage determinations.

All Montana Prevailing Wage Rates are available on the internet at https://erd.dli.mt.gov/labor-standards/state-prevailing-wage-rates or by contacting the department at (406) 444-6543.

In addition, this publication provides general information concerning compliance with Montana's Prevailing Wage Law and the payment of prevailing wages. For detailed compliance information relating to public works contracts and payment of prevailing wage rates, please consult the regulations on the internet at erd.dli.mt.gov/labor-standards or contact the department at (406) 444-6543.

SARAH SWANSON
Commissioner
Department of Labor and Industry
State of Montana

TABLE OF CONTENTS

MONTANA PREVAILING WAGE REQUIREMENTS:

A. Date of Publication 3
B. Definition of Building Construction 3
C. Definition of Public Works Contract 3
D. Prevailing Wage Schedule 3
E. Rates to Use for Projects 3
F. Wage Rate Adjustments for Multiyear Contracts 3
G. Fringe Benefits 4
H. Prevailing Wage Districts 4
I. Dispatch City 5
J. Zone Pay 5
K. Computing Travel Benefits 5
L. Per Diem 5
M. Apprentices 5
N. Posting Notice of Prevailing Wages 5
O. Employment Preference 5
P. Projects of a Mixed Nature 6
Q. Occupations Definitions Website 6
R. Welder Rates 6
S. Foreman Rates 6

WAGE RATES:

BOILERMAKERS 7
BRICK, BLOCK, AND STONE MASONS 7
CARPENTERS 7
CARPET INTALLERS 8
CEMENT MASONS AND CONCRETE FINISHERS 8
CONSTRUCTION EQUIPMENT OPERATORS
- OPERATORS GROUP 1 8
- OPERATORS GROUP 2 9
- OPERATORS GROUP 3 9
- OPERATORS GROUP 4 10
- OPERATORS GROUP 5 10
- OPERATORS GROUP 6 10
- OPERATORS GROUP 7 11

CONSTRUCTION LABORERS
- LABORERS GROUP 1 11
- LABORERS GROUP 2 11
- LABORERS GROUP 3 12
- LABORERS GROUP 4 12

DRYWALL APPLICATORS 12
ELECTRICIANS: INCLUDING BUILDING AUTOMATION CONTROL 13
ELEVATOR CONSTRUCTORS 13
FLOOR LAYERS 14
GLAZIERS 14
HEATING AND AIR CONDITIONING 14
INSULATION WORKERS - MECHANICAL (HEAT AND FROST) 14
IRONWORKERS - REINFORCING IRON AND REBAR WORKERS 15
IRONWORKERS - STRUCTURAL IRON AND REBAR WORKERS 15
MILLWRIGHTS 15
PAINTERS: INCLUDING PAPERHANGERS 15
PILE BUCKS 16
PILOT CAR DRIVERS .....
PLASTERERS 16
PLUMBERS, PIPEFITTERS, AND STEAMFITTERS 17
ROOFERS 18
SHEET METAL WORKERS 18
SOLAR PHOTOVOLTAIC INSTALLERS 19
SPRINKLER FITTERS 20
TAPERS 20
TELECOMMUNICATIONS EQUIPMENT INSTALLERS 21
TERRAZZO WORKERS AND FINISHERS 21
TILE AND STONE SETTERS 21
TRUCK DRIVERS 22

A. Date of Publication January 13, 2025

B. Definition of Building Construction

For the purposes of Prevailing Wage, the Commissioner of Labor and Industry has determined that building construction occupations are defined to be those performed by a person engaged in a recognized trade or craft, or any skilled, semi-skilled, or unskilled manual labor related to the construction, alteration, or repair of a public building or facility, and does not include engineering, superintendence, management, office or clerical work.

The Administrative Rules of Montana (ARM), 24.17.501(2) – 2(c), states *"Building construction projects generally are the constructions of sheltered enclosures with walk-in access for housing persons, machinery, equipment, or supplies. It includes all construction of such structures, incidental installation of utilities and equipment, both above and below grade level, as well as incidental grading, utilities and paving.*

Examples of building construction include, but are not limited to, alterations and additions to buildings, apartment buildings (5 stories and above), arenas (closed), auditoriums, automobile parking garages, banks and financial buildings, barracks, churches, city halls, civic centers, commercial buildings, court houses, detention facilities, dormitories, farm buildings, fire stations, hospitals, hotels, industrial buildings, institutional buildings, libraries, mausoleums, motels, museums, nursing and convalescent facilities, office buildings, out-patient clinics, passenger and freight terminal buildings, police stations, post offices, power plants, prefabricated buildings, remodeling buildings, renovating buildings, repairing buildings, restaurants, schools, service stations, shopping centers, stores, subway stations, theaters, warehouses, water and sewage treatment plants (buildings only), etc."

C. Definition of Public Works Contract

Section 18-2-401(11)(a), MCA defines "public works contract" as *"…a contract for construction services let by the state, county, municipality, school district, or political subdivision or for nonconstruction services let by the state, county, municipality, or political subdivision in which the total cost of the contract is in excess of $25,000…"*.

D. Prevailing Wage Schedule

This publication covers only Building Construction occupations and rates. These rates will remain in effect until superseded by a more current publication. Current prevailing wage rate schedules for Heavy Construction, Highway Construction, and Nonconstruction Services occupations can be found on the internet at https://erd.dli.mt.gov/labor-standards/state-prevailing-wage-rates/ or by contacting the department at (406) 444-6543.

E. Rates to Use for Projects

ARM, 24.17.127(1)(c), states *"The wage rates applicable to a particular public works project are those in effect at the time the bid specifications are advertised."*

F. Wage Rate Adjustments for Multiyear Contracts

Section 18-2-417, MCA states:

"(1) Any public works contract that by the terms of the original contract calls for more than 30 months to fully perform must include a provision to adjust, as provided in subsection (2), the standard prevailing rate of wages to be paid to the workers performing the contract.

(2) The standard prevailing rate of wages paid to workers under a contract subject to this section must be adjusted 12 months after the date of the award of the public works contract. The amount of the adjustment must be a 3% increase. The adjustment must be made and applied every 12 months for the term of the contract.

(3) Any increase in the standard rate of prevailing wages for workers under this section is the sole responsibility of the contractor and any subcontractors and not the contracting agency."

G. Fringe Benefits

Section 18-2-412, MCA states:

"(1) To fulfill the obligation…a contractor or subcontractor may:

(a) pay the amount of fringe benefits and the basic hourly rate of pay that is part of the standard prevailing rate of wages directly to the worker or employee in cash;

(b) make an irrevocable contribution to a trustee or a third person pursuant to a fringe benefit fund, plan, or program that meets the requirements of the Employee Retirement Income Security Act of 1974 or that is a bona fide program approved by the U. S. department of labor; or

(c) make payments using any combination of methods set forth in subsections (1)(a) and (1)(b) so that the aggregate of payments and contributions is not less than the standard prevailing rate of wages, including fringe benefits and travel allowances, applicable to the district for the particular type of work being performed.

(2) The fringe benefit fund, plan, or program described in subsection (1)(b) must provide benefits to workers or employees for health care, pensions on retirement or death, life insurance, disability and sickness insurance, or bona fide programs that meet the requirements of the Employee Retirement Income Security Act of 1974 or that are approved by the U. S. department of labor."

Fringe benefits are paid for all hours worked (straight time and overtime hours). However, fringe benefits are not to be considered a part of the hourly rate of pay for calculating overtime, unless there is a collectively bargained agreement in effect that specifies otherwise.

H. Prevailing Wage Districts

Montana counties are aggregated into 4 districts for the purpose of prevailing wage. The prevailing wage districts are composed of the following counties:

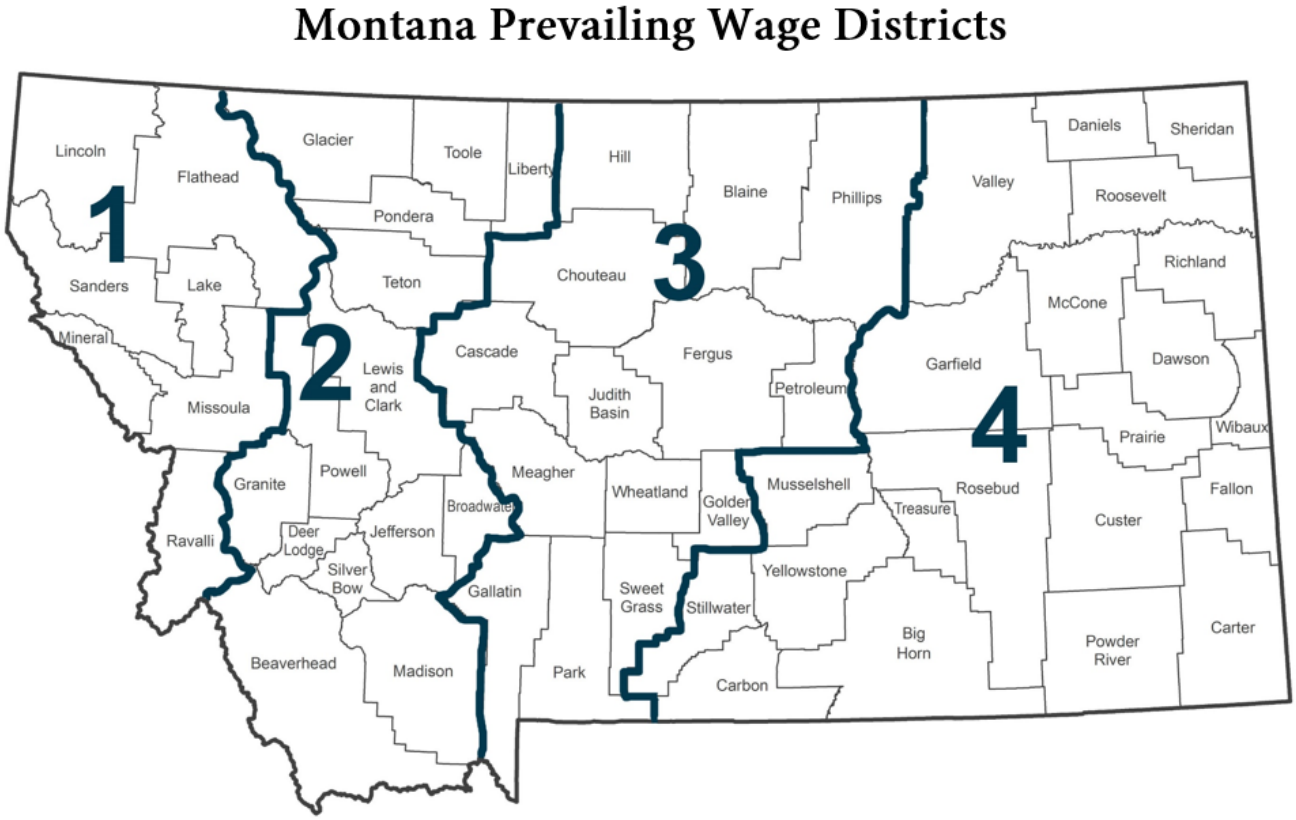

I. Dispatch City

ARM, 24.17.103(11), defines dispatch city as *"…the courthouse in the city from the following list which is closest to the center of the job: Billings, Bozeman, Butte, Great Falls, Helena, Kalispell, Miles City, Missoula and Sidney."* A dispatch city shall be considered the point of origin only for jobs within the counties identified in that district (as shown below):

> **District 1 – Kalispell and Missoula:** includes Flathead, Lake, Lincoln, Mineral, Missoula, Ravalli, and Sanders;
> **District 2 – Butte and Helena:** includes Beaverhead, Broadwater, Deer Lodge, Glacier, Granite, Jefferson, Lewis and Clark, Liberty, Madison, Pondera, Powell, Silver Bow, Teton, and Toole;
> **District 3 – Bozeman and Great Falls:** includes Blaine, Cascade, Chouteau, Fergus, Gallatin, Golden Valley, Hill, Judith Basin, Meagher, Park, Petroleum, Phillips, Sweet Grass, and Wheatland;
> **District 4 – Billings, Miles City and Sidney:** includes Big Horn, Carbon, Carter, Custer, Daniels, Dawson, Fallon, Garfield, McCone, Musselshell, Powder River, Prairie, Richland, Roosevelt, Rosebud, Sheridan, Stillwater, Treasure, Valley, Wibaux, and Yellowstone.

J. Zone Pay

Zone pay is not travel pay. ARM, 24.17.103(25), defines zone pay as *"…an amount added to the base pay; the combined sum then becomes the new base wage rate to be paid for all hours worked on the project. Zone pay must be determined by measuring the road miles one way over the shortest practical maintained route from the dispatch city to the center of the job."* See section I above for a list of dispatch cities.

K. Computing Travel Benefits

ARM, 24.17.103(23), states *" 'Travel pay,' also referred to as 'travel allowance,' is and must be paid for travel both to and from the job site, except those with special provisions listed under the classification. The rate is determined by measuring the road miles one direction over the shortest practical maintained route from the dispatch city or the employee's home, whichever is closer, to the center of the job."* See section I above for a list of dispatch cities.

L. Per Diem

ARM, 24.17.103(19), states *" 'Per diem' typically covers costs associated with board and lodging expenses. Per diem is paid when an employee is required to work at a location outside the daily commuting distance and is required to stay at that location overnight or longer."*

M. Apprentices

Wage rates for apprentices registered in approved federal or state apprenticeship programs are contained in those programs. Additionally, Section 18-2-416(2), MCA states *"…The full amount of any applicable fringe benefits must be paid to the apprentice while the apprentice is working on the public works contract."* Apprentices not registered in approved federal or state apprenticeship programs will be paid the appropriate journey level prevailing wage rate when working on a public works contract.

N. Posting Notice of Prevailing Wages

Section 18-2-406, MCA provides that contractors, subcontractors and employers who are *"…performing work or providing construction services under public works contracts, as provided in this part, shall post in a prominent and accessible site on the project or staging area, not later than the first day of work and continuing for the entire duration of the project, a legible statement of all wages and fringe benefits to be paid to the employees."*

O. Employment Preference

Sections 18-2-403 and 18-2-409, MCA requires contractors to give preference to the employment of bona fide Montana residents in the performance of work on public works contracts.

P. Projects of a Mixed Nature

Section 18-2-418, MCA states:

"(1) The contracting agency shall determine, based on the preponderance of labor hours to be worked, whether the public works construction services project is classified as a highway construction project, a heavy construction project, or a building construction project.

(2) Once the project has been classified, employees in each trade classification who are working on that project must be paid at the rate for that project classification"

Q. Occupations Definitions

You can find definitions for these occupations on the following Bureau of Labor Statistics website:
http://www.bls.gov/oes/current/oes_stru.htm

R. Welder Rates

Welders receive the rate prescribed for the craft performing an operation to which welding is incidental.

S. Foreman Rates

Rates are no longer set for foremen. However, if a foreman performs journey level work, the foreman must be paid at least the journey level rate.

WAGE RATES

BOILERMAKERS

No Rate Established

Duties Include:
Construct, assemble, maintain, and repair stationary steam boilers, boiler house auxiliaries, process vessels, and pressure vessels.

↑ Back to Table of Contents

BRICK, BLOCK, AND STONE MASONS

	Wage	Benefit
District 1	$33.81	$18.06
District 2	$33.81	$18.06
District 3	$33.81	$18.06
District 4	$33.81	$18.06

Travel:
All Districts
0-70 mi. free zone
>70-90 mi. $60.00/day
>90 mi. $80.00/day

↑ Back to Table of Contents

CARPENTERS

	Wage	Benefit
District 1	$30.24	$14.33
District 2	$30.24	$14.33
District 3	$30.24	$14.33
District 4	$30.24	$14.33

Zone Pay:
All Districts
0-30 mi. free zone
>30-60 mi. base pay + $4.00/hr.
>60 mi. base pay + $6.00/hr.

Duties Include:
Install roll and batt insulation, and hardwood floors.

↑ Back to Table of Contents

CARPET INSTALLERS

No Rate Established

Duties Include:
Lay and install carpet from rolls or blocks on floors. Install padding and trim flooring materials.

↑ Back to Table of Contents

CEMENT MASONS AND CONCRETE FINISHERS

	Wage	Benefit
District 1	$37.54	$17.04
District 2	$37.54	$17.04
District 3	$37.54	$17.04
District 4	$26.39	$17.04

Duties Include:
Smooth and finish surfaces of poured concrete, such as floors, walks, sidewalks, or curbs. Align forms for sidewalks, curbs, or gutters.

Travel and Per Diem:
All Districts
0-30 mi free zone
30-60 mi base pay+2.95/hr.
>60 mi base pay+4.75/hr.

↑ Back to Table of Contents

CONSTRUCTION EQUIPMENT OPERATORS GROUP 1

	Wage	Benefit
District 1	$27.20	$15.20
District 2	$30.03	$13.63
District 3	$32.36	$13.38
District 4	$32.36	$13.15

This group includes but is not limited to:
Air Compressor; Auto Fine Grader; Belt Finishing; Boring Machine (Small); Cement Silo; Crane, A-Frame Truck Crane; Crusher Conveyor; DW-10, 15, and 20 Tractor Roller; Farm Tractor; Forklift; Form Grader; Front-End Loader, under 1 cu. yd; Oiler, Herman Nelson Heater; Mucking Machine; Oiler, All Except Cranes/Shovels; Pumpman.

Travel Pay
District 1
0-45 mi. free zone
>45-85 mi. $60.00/day
>85 mi. $90.00/day

Zone Pay
District 2
0-30 mi. free zone
>30-60 mi. base pay + $3.50/hr.
>60 mi. base pay + $5.50/hr.

Districts 3 and 4
0-30 mi. free zone
>30-60 mi. base pay + $3.05/hr.
>60 mi. base pay + $4.85/hr.

↑ Back to Table of Contents

CONSTRUCTION EQUIPMENT OPERATORS GROUP 2

	Wage	Benefit
District 1	$30.82	$13.55
District 2	$31.76	$13.42
District 3	$31.40	$14.15
District 4	$28.60	$11.70

This group includes but is not limited to:
Air Doctor; Backhoe\Excavator\Shovel, up to and incl. 3 cu. yds; Bit Grinder; Bitunimous Paving Travel Plant; Boring Machine, Large; Broom, Self-Propelled; Concrete Travel Batcher; Concrete Float & Spreader; Concrete Bucket Dispatcher; Concrete Finish Machine; Concrete Conveyor; Distributor; Dozer, Rubber-Tired, Push, & Side Boom; Elevating Grader\Gradall; Field Equipment Serviceman; Front-End Loader, 1 cu. yd up to and incl. 5 cu. yds; Grade Setter; Heavy Duty Drills, All Types; Hoist\Tugger, All; Hydralift Forklifts & Similar; Industrial Locomotive; Motor Patrol (except finish); Mountain Skidder; Oiler, Cranes\Shovels; Pavement Breaker, EMSCO; Power Saw, Self-Propelled; Pugmill; Pumpcrete\Grout Machine; Punch Truck; Roller, other than Asphalt; Roller, Sheepsfoot (Self-Propelled); Roller, 25 tons and over; Ross Carrier; Rotomill, under 6 ft; Trenching Machine; Washing /Screening Plant.

Travel Pay
District 1
0-45 mi. free zone
>45-85 mi. $60.00/day
>85 mi. $90.00/day

Zone Pay
District 2
0-30 mi. free zone
>30-60 mi. base pay + $3.50/hr.
>60 mi. base pay + $5.50/hr.

Districts 3 and 4
0-30 mi. free zone
>30-60 mi. base pay + $3.05/hr.
>60 mi. base pay + $4.85/hr.

↑ Back to Table of Contents

CONSTRUCTION EQUIPMENT OPERATORS GROUP 3

	Wage	Benefit
District 1	$33.45	$12.53
District 2	$33.40	$13.65
District 3	$34.16	$13.82
District 4	$31.51	$13.88

This group includes but is not limited to:
Asphalt Paving Machine; Asphalt Screed; Backhoe\Excavator\Shovel, over 3 cu. yds; Cableway Highline; Concrete Batch Plant; Concrete Curing Machine; Concrete Pump; Cranes, Creter; Cranes, Electric Overhead; Cranes, 24 tons and under; Curb Machine\Slip Form Paver; Finish Dozer; Front-End Loader, over 5 cu. yds; Mechanic\Welder; Pioneer Dozer; Roller Asphalt (Breakdown & Finish); Rotomill, over 6 ft; Scraper, Single, Twin, or Pulling Belly-Dump; YO-YO Cat Haul Truck, Articulating Trucks, Vac Truck.

Travel Pay
District 1
0-45 mi. free zone
>45-85 mi. $60.00/day
>85 mi. $90.00/day

Zone Pay
Districts 2 - 4
0-30 mi. free zone
>30-60 mi. base pay + $3.50/hr.
>60 mi. base pay + $5.50/hr.

↑ Back to Table of Contents

CONSTRUCTION EQUIPMENT OPERATORS GROUP 4

	Wage	Benefit
District 1	$35.67	$13.45
District 2	$35.67	$13.75
District 3	$34.23	$14.31
District 4	$35.67	$14.34

This group includes but is not limited to:
Asphalt\Hot Plant Operator; Cranes, 25 tons up to and incl. 44 tons; Crusher Operator; Finish Motor Patrol; Finish Scraper.

Travel Pay
District 1
0-45 mi. free zone
>45-85 mi. $60.00/day
>85 mi. $90.00/day

Zone Pay
Districts 2 - 4
0-30 mi. free zone
>30-60 mi. base pay + $3.50/hr.
>60 mi. base pay + $5.50/hr.

↑ Back to Table of Contents

CONSTRUCTION EQUIPMENT OPERATORS GROUP 5

	Wage	Benefit
District 1	$35.05	$14.76
District 2	$36.77	$14.95
District 3	$36.77	$15.02
District 4	$36.77	$15.11

This group includes but is not limited to:
Cranes, 45 tons up to and incl. 74 tons.

Travel Pay
District 1
0-45 mi. free zone
>45-85 mi. $60.00/day
>85 mi. $90.00/day

Zone Pay
Districts 2 - 4
0-30 mi. free zone
>30-60 mi. base pay + $3.50/hr.
>60 mi. base pay + $5.50/hr.

↑ Back to Table of Contents

CONSTRUCTION EQUIPMENT OPERATORS GROUP 6

	Wage	Benefit
District 1	$37.86	$16.50
District 2	$37.86	$16.50
District 3	$37.86	$16.50
District 4	$37.20	$16.55

This group includes but is not limited to:
Cranes, 75 tons up to and incl. 149 tons; Cranes, Whirley (All).

Zone Pay:
All Districts
0-30 mi. free zone
>30-60 mi. base pay + $3.50/hr.
>60 mi. base pay + $5.50/hr.

↑ Back to Table of Contents

CONSTRUCTION EQUIPMENT OPERATORS GROUP 7

	Wage	Benefit
District 1	$38.96	$16.35
District 2	$38.96	$16.31
District 3	$38.96	$16.50
District 4	$38.96	$16.31

This group includes but is not limited to:
Cranes, 150 tons up to and incl. 250 tons; Cranes, over 250 tons—add $1.00 for every 100 tons over 250 tons; Crane, Tower (All); Crane Stiff-Leg or Derrick; Helicopter Hoist.

Zone Pay:
All Districts
0-30 mi. free zone
>30-60 mi. base pay + $3.50/hr.
>60 mi. base pay + $5.50/hr.

↑ Back to Table of Contents

CONSTRUCTION LABORERS GROUP 1/FLAG PERSON FOR TRAFFIC CONTROL

	Wage	Benefit
District 1	$24.55	$12.00
District 2	$24.55	$12.00
District 3	$24.55	$12.00
District 4	$24.55	$12.00

Zone Pay:
All Districts
0-15 mi. free zone
>15-30 mi. base pay + $0.65/hr.
>30-50 mi. base pay + $0.85/hr.
>50 mi. base pay + $1.25/hr.

↑ Back to Table of Contents

CONSTRUCTION LABORERS GROUP 2

	Wage	Benefit
District 1	$22.44	$7.71
District 2	$24.72	$11.38
District 3	$28.46	$12.00
District 4	$24.43	$9.44

This group includes but is not limited to:
General Labor; Asbestos Removal; Burning Bar; Bucket Man; Carpenter Tender; Caisson Worker; Cement Mason Tender; Cement Handler (dry); Chuck Tender; Choker Setter; Concrete Worker; Curb Machine-lay Down; Crusher and Batch Worker; Heater Tender; Fence Erector; Landscape Laborer; Landscaper; Lawn Sprinkler Installer; Pipe Wrapper; Pot Tender;
Powderman Tender; Rail and Truck Loaders and Unloaders; Riprapper; Sign Erection; Guardrail and Jersey Rail; Spike Driver; Stake Jumper; Signalman; Tail Hoseman; Tool Checker and Houseman and Traffic Control Worker.

Zone Pay:
All Districts
0-15 mi. free zone
>15-30 mi. base pay + $0.65/hr.
>30-50 mi. base pay + $0.85/hr.
>50 mi. base pay + $1.25/hr.

↑ Back to Table of Contents

CONSTRUCTION LABORERS GROUP 3

	Wage	Benefit
District 1	$25.55	$12.00
District 2	$25.55	$12.00
District 3	$25.55	$12.00
District 4	$25.55	$12.00

This group includes but is not limited to:
Concrete Vibrator; Dumpman (Grademan); Equipment Handler; Geotextile and Liners; High-Pressure Nozzleman; Jackhammer (Pavement Breaker) Non-Riding Rollers; Pipelayer; Posthole Digger (Power); Power Driven Wheelbarrow; Rigger; Sandblaster; Sod Cutter-Power and Tamper.

Zone Pay:
All Districts
0-15 mi. free zone
>15-30 mi. base pay + $0.65/hr.
>30-50 mi. base pay + $0.85/hr.
>50 mi. base pay + $1.25/hr.

↑ Back to Table of Contents

CONSTRUCTION LABORERS GROUP 4

	Wage	Benefit
District 1	$26.48	$11.57
District 2	$25.60	$12.00
District 3	$25.60	$12.00
District 4	$25.60	$12.00

This group includes but is not limited to:
Hod Carrier***; Water Well Laborer; Blaster; Wagon Driller; Asphalt Raker; Cutting Torch; Grade Setter; High-Scaler; Power Saws (Faller & Concrete) Powderman; Rock & Core Drill; Track or Truck Mounted Wagon Drill and Welder incl. Air Arc.

Zone Pay:
All Districts
0-15 mi. free zone
>15-30 mi. base pay + $0.65/hr.
>30-50 mi. base pay + $0.85/hr.
>50 mi. base pay + $1.25/hr.

***Hod Carriers will receive the same amount of travel and/or subsistence pay as bricklayers when requested to travel.

↑ Back to Table of Contents

DRYWALL APPLICATORS

No Rate Established

Duties Include:
Drywall and ceiling tile installation.

Zone Pay:
All Districts
0-30 mi. free zone
>30-60 mi. base pay + $4.00/hr.
>60 mi. base pay + $6.00/hr.

↑ Back to Table of Contents

ELECTRICIANS: INCLUDING BUILDING AUTOMATION CONTROL

	Wage	Benefit
District 1	$36.88	$15.78
District 2	$36.00	$15.87
District 3	$36.50	$16.76
District 4	$40.00	$16.95

Duties Include:
Electrical wiring; equipment and fixtures; street lights; electrical control systems. Installation and/or adjusting of building automation controls also during testing and balancing, commissioning and retro-commissioning.

Travel:
District 1

No mileage due when traveling in employer's vehicle.

The following travel allowance is applicable when traveling in employee's vehicle:

0-15 mi. free zone
>15-45 mi. $0.585/mi. in excess of the free zone.
>45 mi. $75.00/day

Districts 2 & 3
No mileage due when traveling in employer's vehicle.

The following travel allowance is applicable when traveling in employee's vehicle:

0-08 mi. free zone
>08-50 mi. current federal mileage rate/mi. in excess of the free zone.
>50 mi. $71.57/day

District 4
No mileage due when traveling in employer's vehicle.

The following travel allowance is applicable when traveling in employee's vehicle:

0-18 mi. free zone
>18-60 mi. federal mileage rate/mi.

Per Diem
District 4
>60 mi. $80.00/day
Per Diem in Big Sky and West Yellowstone $125/day.

↑ Back to Table of Contents

ELEVATOR CONSTRUCTORS

	Wage	Benefit
District 1	$64.87	$46.38
District 2	$64.87	$46.38
District 3	$64.87	$46.38
District 4	$64.87	$46.38

Travel:
All Districts
0-15 mi. free zone
>15-25 mi. $49.73/day
>25-35 mi. $99.45/day
>35 mi. $112.90/day

Special Provision:
.93/mile when added to amounts above if using employee vehicle.

↑ Back to Table of Contents

FLOOR LAYERS

No Rate Established

Apply blocks, strips, or sheets of shock-absorbing, sound-deadening, or decorative coverings to floors.

↑ Back to Table of Contents

GLAZIERS

	Wage	Benefit
District 1	$24.13	$3.66
District 2	$24.13	$3.66
District 3	$24.13	$3.66
District 4	$23.73	$4.02

Travel and Per Diem:
All Districts
No travel or per diem established.

↑ Back to Table of Contents

HEATING AND AIR CONDITIONING

	Wage	Benefit
District 1	$32.95	$14.16
District 2	$33.15	$15.35
District 3	$34.69	$16.88
District 4	$35.76	$18.44

Duties Include:
Testing and balancing, commissioning and retro-commissioning of all air-handling equipment and duct work.

All Districts
0-45 mi. free zone
>45 mi.

- $0.25/mi. in employer vehicle.
- $0.65/mi. in employee vehicle.

Per Diem:
All Districts
$85/day

↑ Back to Table of Contents

INSULATION WORKERS - MECHANICAL (HEAT AND FROST)

	Wage	Benefit
District 1	$43.81	$21.99
District 2	$43.81	$21.99
District 3	$43.81	$21.99
District 4	$43.81	$21.99

Duties Include:
Insulate pipes, ductwork or other mechanical systems.

Travel:
0-30 mi. free zone
>30-40 mi. $25.00/day
>40-50 mi. $35.00/day
>50-60 mi. $45.00/day
>60 mi. $130.00/day plus

- $0.56/mi. if transportation is not provided.
- $0.20/mi. if in company vehicle.

↑ Back to Table of Contents

IRONWORKERS – REINFORCING IRON AND REBAR WORKERS

	Wage	Benefit
District 1	$36.83	$26.92
District 2	$34.83	$24.68
District 3	$34.83	$25.37
District 4	$34.16	$25.83

Duties Include:
Structural steel erection; assemble prefabricated metal buildings; cut, bend, tie, and place rebar; energy producing windmill type towers; metal bleacher seating; handrail fabrication and ornamental steel.

Travel:
All Districts
0-45 mi. free zone
>45-85 mi. $100.00/day
>85 mi. $150.00/day

↑ Back to Table of Contents

IRONWORKERS – STRUCTURAL IRON AND STEEL WORKERS

	Wage	Benefit
District 1	$34.94	$26.37
District 2	$34.83	$25.37
District 3	$34.83	$25.37
District 4	$34.83	$25.37

Duties Include:
Structural steel erection; assemble prefabricated metal buildings; cut, bend, tie, and place rebar; energy producing windmill type towers; metal bleacher seating; handrail fabrication and ornamental steel.

Travel:
All Districts
0-45 mi. free zone
>45-85 mi. $100.00/day
>85 mi. $150.00/day

↑ Back to Table of Contents

MILLWRIGHTS

	Wage	Benefit
District 1	$40.45	$21.25
District 2	$40.45	$21.25
District 3	$40.45	$21.25
District 4	$40.45	$21.25

Zone Pay:
All Districts
0-30 mi. free zone
>30-60 mi. base pay + $4.00/hr.
>60 mi. base pay + $6.00/hr.

↑ Back to Table of Contents

PAINTERS: INCLUDING PAPERHANGERS

	Wage	Benefit
District 1	$29.40	$21.48
District 2	$20.30	$21.48
District 3	$29.40	$21.48
District 4	$26.64	$21.48

Travel and Per Diem:
All Districts
No travel or per diem established.

↑ Back to Table of Contents

PILE BUCKS

No Rate Established

Duties Include:
Set up crane; set up hammer; weld tips on piles; set leads; insure piles are driven straight with the use of level or plum bob. Give direction to crane operator as to speed and direction of swing. Cut piles to grade.

Zone Pay:
All Districts
0-30 mi. free zone
>30-60 mi. base pay + $4.00/hr.
>60 mi. base pay + $6.00/hr.

↑ Back to Table of Contents

PILOT CAR DRIVERS

No Rate Established

↑ Back to Table of Contents

PLASTERERS

No Rate Established

Duties Include:
All materials beyond the substrate, such as a moisture barrier, any type of drainage installation between the moisture barrier and insulation or EPS board, the attachment of the EPS board, installation of fiberglass mesh embedded in the base coat, any water-resistant coat that is applied on top of the insulation to serve as a weather barrier, and the application of the finish coat.

↑ Back to Table of Contents

PLUMBERS, PIPEFITTERS, AND STEAMFITTERS

	Wage	Benefit
District 1	$40.90	$17.47
District 2	$44.90	$17.47
District 3	$44.90	$17.47
District 4	$40.90	$20.86

Duties Include:
Assemble, install, alter, and repair pipe-lines or pipe systems that carry water, steam, air, other liquids or gases. Testing of piping systems, commissioning and retro-commissioning. Workers in this occupation may also install heating and cooling equipment and mechanical control systems.

Travel:
Disrict 1
0-30 mi. free zone
>30-50 mi. $35.00/day
>50-75 mi. $45.00/day
>75 mi. $100.00/day

Special Provision
If transportation is not provided, mileage at $0.35/mi. for one trip out and one trip back is added to the amounts above. However, if the employee is traveling more than 75 miles/day, only subsistence at the rate of $85.00/day is required.

Districts 2 & 3
0-45 mi. free zone
>45 mi.

- $0.00/mi. in employer vehicle.
- $0.65/mi. in employee vehicle.

Special Provision:
At the contractors' option, mileage for one trip out and one trip back per week may be paid plus subsistence at the rate of $135.00/day.

District 4
0-70 free zone
>70 mi.

- On jobs when employees do not work consecutive days: $0.55/mi. if employer doesn't provide transportation. Not to exceed two trips.
- On jobs when employees work any number of consecutive days: $110.00/day.

↑ Back to Table of Contents

ROOFERS

	Wage	Benefit
District 1	$32.97	$9.40
District 2	$32.97	$9.40
District 3	$32.97	$9.40
District 4	$25.08	$5.19

Duties Include:
Metal roofing, covers roofs, walls and foundations with water proofing, insulation and vapor barriers in addition to metal flashings. Roofing includes shingles, low slope membranes, metal roofs, insulation, spray foam, coatings and vapor barriers. Wall coverings include metal panels, insulated metal panels and other waterproofing or rain screen systems. Foundation systems include waterproofing and insulation. Excludes prefabricated metal buildings.

Travel:
District 1
0-50 mi. free zone
>50 mi.
- $0.00/mi. in employer vehicle.
- $0.35/mi. in employee vehicle.

District 2 and 3
0-35 mi. free zone
>35 mi.
- $0.00/mi. in employer vehicle.
- $0.40/mi. in employee vehicle.

District 4
0-50 mi. free zone
>50 mi.
- $0.00/mi. in employer vehicle.
- $0.35/mi. in employee vehicle.

Per Diem:
District 1
$84.00/day

District 2 and 3
Employer pays for room + $30.00/day.

District 4
Employer pays for room + $25.00/day.

↑ Back to Table of Contents

SHEET METAL WORKERS

	Wage	Benefit
District 1	$38.14	$21.61
District 2	$38.14	$21.61
District 3	$38.14	$21.61
District 4	$38.14	$21.61

Duties Include:
Testing and balancing, commissioning and retro-commissioning of all air-handling equipment and duct work. Manufacture, fabrication, assembling, installation, dismantling, and alteration of all HVAC systems, air conveyer systems, and exhaust systems. All lagging over insulation and all duct lining.

All Districts

0-45 mi. free zone
46-65 mi. $35/day
>65 mi. $155/day for overnight stay
>65 mi. if employee is driving/riding in a company vehicle and returns home the same day, drive time shall be paid both ways, and no subsistence paid. Drive time will be at straight time and there shall be no benefits paid for drive time. Drive time will be outside the regular shift.

↑ Back to Table of Contents

SOLAR PHOTOVOLTAIC INSTALLERS

	Wage	Benefit
District 1	$36.50	$16.76
District 2	$36.50	$16.76
District 3	$36.50	$16.76
District 4	$36.50	$16.76

Travel:

Districts 1, 2 and 3
No mileage due when traveling in employer's vehicle.

The following travel allowance is applicable when traveling in employee's vehicle:

0-08 mi. free zone
>08-50 mi. federal mileage rate/mi. in excess of the free zone.
>50 mi. $60.57/day

District 4
No mileage due when traveling in employer's vehicle.

The following travel allowance is applicable when traveling in employee's vehicle:

0-18 mi. free zone
>18-60 mi. federal mileage rate/mi.
>60 mi. $75.00/day

↑ Back to Table of Contents

SPRINKLER FITTERS

	Wage	Benefit
District 1	$44.11	$32.36
District 2	$44.11	$23.55
District 3	$38.70	$20.37
District 4	$44.11	$21.97

Duties Include:
Duties Include but not limited to any and all fire protection systems: Installation, dismantling, inspection, testing, maintenance, repairs, adjustments, and corrections of all fire protection and fire control systems, including both overhead and underground water mains, all piping, fire hydrants, standpipes, air lines, tanks, and pumps used in connection with sprinkler and alarm systems.

Travel
All Districts

The following travel allowance is applicable when traveling in employee's vehicle.

0-60 mi. free zone
>60-80 mi. $19.00/day
>80-100 mi. $29.00/day
>100 mi. $105.00/day + the IRS rate per mile and $8.92 for every 15 miles traveled for one trip out and one trip back

No travel allowance required when in employer's vehicle except when staying the night.

↑ Back to Table of Contents

TAPERS

No Rate Established

Travel and Per Diem:
All Districts
No travel or per diem established.

↑ Back to Table of Contents

TELECOMMUNICATIONS EQUIPMENT INSTALLERS

	Wage	Benefit
District 1	$39.66	$14.43
District 2	$22.00	$11.06
District 3	$22.00	$11.27
District 4	$22.00	$11.27

Travel:
All Districts
The federal mileage rate/mi. in effect when travel occurs if using own vehicle.

Per Diem:
All Districts
Employer pays for meals and lodging up to $75.00/day. When jobsite is located in Big Sky, West Yellowstone, and Gardiner, lodging and meals will be provided by the employer for all actual and reasonable expenses incurred.

Duties Include:
Install voice; sound; vision and data systems. This occupation includes burglar alarms, fire alarms, fiber optic systems, and video systems for security or entertainment

↑ Back to Table of Contents

TERRAZZO WORKERS AND FINISHERS

No Rate Established

Duties Include:
Finish work on hard tile, marble, and wood tile to floors, ceilings, and roof decks

↑ Back to Table of Contents

Travel and Per Diem
No travel or per diem established.

TILE AND STONE SETTERS

No Rate Established

Duties Include:
Apply hard tile, stone, and comparable materials to walls, floors, ceilings, countertops, and roof decks.

↑ Back to Table of Contents

TRUCK DRIVERS

Pilot Car Driver **No Rate Established**

	Wage	Benefit
District 1	$23.68	$ 7.67
District 2	$23.80	$ 6.13
District 3	$23.80	$ 6.13
District 4	$23.68	$ 7.67

Truck drivers include but are not limited to:
Combination Truck & Concrete Mixer; Distributor Driver; Dry Batch Trucks; DumpTrucks & Similar Equipment; Flat Trucks; Lowboys, Four-Wheel Trailers, Float Semitrailer; Powder Truck Driver (Bulk Unloader Type); Servicemen; Service Truck Drivers, Fuel Truck Drivers, Tiremen; Trucks with Power Equipment; Truck Mechanic; Water Tank Drivers, Petroleum Product Drivers.

Zone Pay:
All Districts
No zone pay established.

↑ Back to Table of Contents

EXHIBIT C

LEWIS AND CLARK COUNTY INDEPENDENT CONTRACTOR CONTRACT

LEWIS AND CLARK COUNTY
INDEPENDENT CONTRACTOR CONTRACT

This Contract is entered into by and between Lewis and Clark County, Montana, herein referred to as "COUNTY", and Company Name, herein referred to as "CONTRACTOR", whose address is Street, City, State, Zip Code; phone number is (XXX) XXX-XXXX; Montana Contractor Registration Number is XXXXXX; and Federal Employee Identification Number is XX-XXXXXX.

THE PARTIES AGREE AS FOLLOWS:

1. SCOPE OF SERVICES: CONTRACTOR agrees to complete and perform the work or services in accordance with the solicitation, plans, and specifications attached and hereby incorporated as **Exhibit X**.

2. INDEPENDENT CONTRACTOR: COUNTY hereby employs CONTRACTOR as an independent contractor to complete and perform the scope of services. It is understood by the parties hereto that CONTRACTOR is an independent CONTRACTOR and that neither its principals nor its employees, if any, are employees of COUNTY for purposes of tax, retirement system, or social security (FICA) withholding. It is further understood that pursuant to section 39-71-401, MCA, CONTRACTOR has obtained, and shall maintain at its expense for the duration of this Contract, coverage in a workers' compensation plan for its principals and employees for the services to be performed hereunder. COUNTY shall not have control over the performance of this Contract by CONTRACTOR or its employees, except to specify the time and place of performance. No changes to key personnel may be made by CONTRACTOR without consent of COUNTY. COUNTY shall not be responsible for security or protection of CONTRACTOR'S supplies or equipment.

3. WARRANTY: CONTRACTOR warrants that all services shall be performed in a professional manner. CONTRACTOR acknowledges that it shall be liable for any breach of this warranty for a period of one (1) year from the time services are completed.

4. LIAISON: COUNTY's designated liaison with CONTRACTOR is Officer's Name, Officer's Title or their designee. CONTRACTOR's designated liaison with COUNTY is Name of Individual in Company.

5. EFFECTIVE DATE AND TIME OF PERFORMANCE: CONTRACTOR shall commence work *[a]* by Month Day, Year *or [b]* upon approval of this Contract by both parties and shall complete the described work by Month Day, Year.

6. COMPENSATION: For the satisfactory completion of the scope services, COUNTY shall pay CONTRACTOR time and materials for a total sum not to exceed Amount of Dollars/Cents ($X,XXX.XX). CONTRACTOR shall submit *[a]* monthly *[b]* quarterly *or [c]* final invoices to COUNTY based on **Exhibit X**, Schedule of Billing Rates. COUNTY shall pay invoices within 30 days of invoice date. Additionally, COUNTY shall withhold at least one thousand dollars ($1,000.00) of the total Contract price pursuant to section 18-2-404 (2), MCA, until the

termination of this Contract, but may not withhold more than five percent (5%) of the total Contract price pursuant to section 18-2-316, MCA, if CONTRACTOR is performing by the terms of this Contract.

7. CONFLICT OF INTEREST: CONTRACTOR covenants that it presently has no interest and shall not acquire any interest, direct or indirect, in the project, which would conflict in any manner or degree with the performance of its services hereunder. CONTRACTOR further covenants that in performing this Contract it shall employ no person who has such interest.

8. MODIFICATION AND ASSIGNABILITY OF CONTRACT: This Contract contains the entire agreement between the parties, and no statements, promises, or inducements made by either party, or agents of either party, which are not contained in the written Contract, are valid or binding. This Contract may not be enlarged, modified or altered except upon written agreement signed by both parties hereto. CONTRACTOR may not subcontract or assign its rights, including the right to compensation, or duties arising hereunder without the prior written consent of COUNTY. Any subcontractor or assignee shall be bound by all of the terms and conditions of this Contract.

9. OWNERSHIP AND PUBLICATION OF MATERIALS: All reports, information, data, and other materials prepared by CONTRACTOR pursuant to this Contract are the property of COUNTY which has the exclusive and unrestricted authority to release, publish or otherwise use, in whole or part, information relating thereto. Any reuse without written verification or adaptation for the specific purpose intended shall be at the COUNTY 's sole risk and without liability or legal exposure to CONTRACTOR. No material produced in whole or in part under this Contract may be copyrighted or patented in the United States or in any other country without the prior written approval of COUNTY.

10. INDEMNIFICATION: CONTRACTOR waives all claims and recourse against COUNTY, including the right of contribution for loss and damage to persons or property arising from, growing out of, or in any way connected with or incidental to CONTRACTOR's performance of this Contract except for liability arising out of concurrent or sole negligence of COUNTY or its officers, agents or employees. Further, CONTRACTOR shall indemnify, hold harmless, and defend COUNTY against all claims, demands, damages, costs, expenses or liability arising out of CONTRACTOR's negligent performance of this Contract except for liability arising out of the concurrent or sole negligence of COUNTY or its officers, agents or employees.

11. INSURANCE: CONTRACTOR shall maintain general liability insurance from an insurance carrier licensed to do business in the State of Montana in the amount of one million dollars ($1,000,000.00) for each occurrence (minimum) and two million dollars ($2,000,000.00) aggregate. CONTRACTOR also agrees to maintain workers compensation insurance from an insurance carrier licensed to do business in the State of Montana. Proof of general liability and workers compensation insurance shall be provided to COUNTY prior to commencing work under this Contract. COUNTY must be listed as an additional insured on the general liability insurance certificate for this Contract.

    CONTRACTOR shall provide sufficient Performance Bond or an irrevocable letter of credit,

drawn or issued by any federal or state-chartered bank or savings and loan association that is insured by or for which insurance administered by the federal deposit insurance corporation or a credit union insured by the national credit union share insurance fund in an amount equal to one hundred percent (100%) of the approximate total amount guaranteeing the full and faithful execution of the work and performance of the Contract.

CONTRACTOR shall provide a good and sufficient Payment Bond or an irrevocable letter of credit, drawn on or issued by any federally or state-chartered bank or savings and loan association that is insured by or for which insurance administered by the federal deposit insurance corporation or a credit union insured by the national credit union share insurance fund in an amount equal to one hundred percent (100%) of the approximate total amount guaranteeing the full and proper protection of all claimant's supplying labor and materials in the execution of the work provided for and for the use of each such claimant.

12. COMPLIANCE WITH LAWS: CONTRACTOR shall comply with applicable federal, state, and local laws, rules and regulations. CONTRACTOR or subcontractors doing work on this project shall be required to obtain registration with the Montana Secretary of State's Office and the Montana Department of Labor and Industry. CONTRACTOR is responsible for obtaining any and all permits required to perform the Contract.

13. NONDISCRIMINATION: CONTRACTOR shall not discriminate against any employee or applicant for employment on the basis of race, color, religion, creed, political ideas, sex, age, marital status, physical or mental disability, national origin, or sexual orientation.

14. MONTANA PREVAILING WAGE: All employees employed by CONTRACTOR or their subcontractor(s) in performance of this Contract which exceeds twenty-five thousand dollars ($25,000.00) will be paid wages at rates as may be required by the laws of the State of Montana in accordance with the schedule of Montana Prevailing Wage Rates established by the Montana Department of Labor and Industry. Rates applicable to this Contract are attached as **Exhibit X** and, by this reference, made part of this Contract.

    Each CONTRACTOR (Prime and sub) must submit (through the prime CONTRACTOR) certified payrolls for each week from the time the project begins through completion. Certified payrolls must be numbered sequentially and submitted on a weekly basis whether or not work was performed. If no work was performed, CONTRACTOR shall note this on the payroll.

15. PREFERENCE: CONTRACTOR unequivocally agrees to give preference to the employment of bona fide Montana residents in compliance with MCA 18-2-403 (1). Pursuant to MCA 18-2-409, except for projects involving the expenditure of federal aid funds or where residency preference laws are specifically prohibited by federal law, the CONTRACTOR shall ensure that at least 50% of the workers of the CONTRACTOR (including workers employed by subcontractors) working on the project shall be bona fide Montana residents.

16. SPECIAL FUEL TAX: ***This Section only applies if CONTRACTOR is doing work pertaining to a public road.*** As stated in the Montana Codes Annotated (MCA) 15-70-403(8-9), fuels

used by CONTRACTOR and their subcontractor(s) in connection with any work performed under contracts pertaining to the construction, reconstruction, or improvement of a highway or street and its appurtenances awarded by any public agencies, including federal, state, county, municipal or other political subdivisions, must be fuel on which Montana fuel tax has been paid.

17. PLACE OF PERFORMANCE, CONSTRUCTION, AND VENUE: Performance of this Contract is in Lewis and Clark County, Montana and venue for any litigation arising from performance of this Contract is the 1st Judicial District in and for the County of Lewis and Clark, State of Montana. This Contract shall be construed under and governed by the laws of the State of Montana.

18. ATTORNEY FEES: Should either party be required to resort to litigation, arbitration, or mediation to enforce the terms of this Contract, the prevailing party, whether plaintiff or defendant, shall be entitled to costs, including reasonable attorney's fees and expert witness fees. If the court, arbitrator, or mediator awards relief to both parties, each party shall bear its own costs in their entirety.

19. FAILURE TO PERFORM: Upon any material default or substantial failure to perform this Contract by either party, the other party shall be entitled to the following remedy:
    a. Stop performing or accepting performance of the work until the matter is resolved;
    b. Within a reasonable time of discovery of the defect or failure to perform, provide the other party with a written description of the defect or failure, and:
        i. If the defect or failure to perform can be cured, demand specific remedial action within a reasonable time certain; or
        ii. If the defect or failure to perform cannot be cured, specify any alternative performance which would be acceptable in lieu of the required performance and a time within which the alternative performance shall be required; or
        iii. If the defect or failure to perform cannot be cured and no reasonable alternative performance is acceptable, notify the other party of the termination of the Contract as of a date certain and state therein whether an action for breach of the Contract will be brought.
        iv. Where appropriate, obtain completion of the performance of the remaining balance of the Contract within the original party.
    c. If the defect or failure to perform is not corrected or alternative performance completed within the time certain specified, the party alleging breach may initiate an action in the 1st Judicial District in and for the County of Lewis and Clark, State of Montana. If an action is brought, the prevailing party shall be entitled to attorney's fees as well as other costs of suit.

20. TERMINATION: Either party may terminate this Contract upon thirty (30) days written notice to the other party. If this Contract is terminated prior to completion, COUNTY shall pay CONTRACTOR for completed and accepted work within thirty (30) days of termination. CONTRACTOR shall not be entitled to payment for incomplete or unacceptable work.

COUNTY:

Date: _____

_____
Candace Payne, Chair
Board of County Commissioners
Lewis and Clark County

ATTEST:

_____
Amy Reeves, Clerk and Recorder

(Seal)

CONTRACTOR:

Date: _____

_____
Individual's Name
Individual's Title Within the Company
Company's Name

State of _____

County of _____

This instrument was acknowledged before me on _____ (date) by Individual's Name as Individual's Title Within the Company of Company's Name.

_____
(Signature of Notarial Officer)

(Seal)

APPENDIX A

PROJECT SPECIFICATIONS

DIVISION 26 - ELECTRICAL

SECTION 260000 -- ELECTRICAL SPECIFICATION INDEX

260000	Electrical Specification Index
260100	General Electrical Requirements
260200	Local Site Conditions
260500	Identification
261000	Basic Materials and Methods
261100	Conduit and Fittings
261200	Wire and Cable
261300	Enclosures
263213	Diesel Engine Driven Generator Sets
263623	Automatic Transfer Switch
264500	Grounding

SECTION 260100

GENERAL ELECTRICAL REQUIREMENTS

PART I - GENERAL

1.1. SCOPE

A. This section applies to all Division 26 and is part of all other Division 26 sections.

B. The provisions, terms, and requirements of the General Division, Division 1, Applicable Drawings and Technical Specifications herein apply to all work under this Division.

C. Refer to other sections of these specifications for additional requirements.

1.2 WORK INCLUDED

A. The contractor shall provide all labor, materials, equipment, items, articles, operations, methods and skilled supervision as listed, shown, scheduled or mentioned on the drawings or in this specification.

B. The contractor shall provide all incidental items and labor required by good practice to provide the complete systems described.

C. All work shown on Division 26 drawings is the responsibility of Division 26 contractor unless specifically noted otherwise.

D. The contractor shall perform all set-up, adjusting, programming and testing required to ensure a complete and working electrical system.

1.3 WORK EXCLUDED - The following items are to be excluded from this contract.

A. Providing and installing utility company meter, transformer(s) and primary side service.

B. Providing and installing telephone company service entrance cables and demarcation hardware.

1.4 ALTERNATES

A. Make allowance for any changes required in the scope of work due to the affect of alternates and assign any difference in price to each respective alternate.

B. See the General Specifications for a Schedule of Alternates.

1.5 SPECIFICATION TERMINOLOGY

A. Streamlining: The specifications are of the abbreviated or "streamlined" type and include incomplete sentences. Omissions of words or phrases such as "the Contractor shall," "in conformity with," "shall be," "as noted on the drawings," "according to the plans," "an," "the," and "all" are intentional. Omitted words or phrases shall be supplied by inference in the same manner as they are when a "note" appears on the drawings.

B. "Provide" means furnish all products, labor, sub-contracts, and appurtenances required, to install a complete and properly operating, finished condition.

C. "Furnish" means to purchase material as shown and specified, and cart the material to an approved location at the site or elsewhere as noted or agreed, to be installed.

D. "Install" means to set in place and connect, ready for use and in complete and properly operating finished condition, material that has been furnished.

E. "Rough-in" means provide a conduit raceway system with junction boxes, fittings, straps, etc., for future installation of wiring, devices, disconnects and breakers. Provision shall be made in panelboard for future installation of breakers.

F. "Accessible" means arranged so that an appropriately dressed man, 6'-2" tall, weighing 250 pounds, may approach the area in question with the tools and products necessary for the work intended, and may then position himself to properly and safely perform the task to be accomplished, without disassembly or damage to the surrounding installation.

G. "Serviceable" means arranged so that the component or product in question may be properly removed and replaced without disassembly, destruction or damage to the surrounding installation.

H. "Product" is a generic term which includes materials, equipment, fixtures and any physical

item used on the project.

I. The terms "the Contractor" or "this Contractor," when used in this section of the specifications, shall be construed to mean the contractor for electrical work.

J. The words "equivalent" or "equal" where used in this specification shall mean a product of like type and function that complies with all applicable provisions of the drawings and specifications and which has been approved as a substitute for the specified item in the manner prescribed in these specifications.

1.6 INTENT OF SPECIFICATIONS AND DRAWINGS

A. It is the intent of these plans and specifications to result in a complete electrical installation in complete accordance with all applicable codes and ordinances.

B. The drawings and specifications are intended to supplement each other and any details contained in one and not the other shall be included as if contained in both. Items not specifically mentioned in the specifications or noted on the drawings, but which are necessary to make a complete working installation shall be included

C. The Electrical Drawings shall serve as the working drawings, but the Architectural Drawings shall take precedence over the Electrical Drawings, if any dimensional discrepancies exist. This Contractor shall review the plans for the work of the other trades and shall adjust his work to conform to all conditions indicated thereon.

D. Work under this section has been indicated on the drawings in locations which should allow installation without interfering with the work of other trades; however, exact finish locations cannot be indicated. Therefore, locations of all work and equipment shall be verified to avoid interferences, preserve head room and keep openings and passageways clear. Changes shall be made in location of equipment and materials which may be required to accomplish these purposes without additional claims or charges by the Contractor.

E. The drawings are partly diagrammatic and do not show precise routing of conduits or exact location of all products, and may not show in minute detail all features of the installation. Locations of devices, fixtures and equipment are approximate unless dimensioned.

F. Riser diagrams and control schematics are not to scale and do not necessarily show the physical arrangement of the equipment. Do not use riser diagrams or schematics to obtain lineal conduit and cabling distances.

G. In the event that any discrepancies of any kind exist or required items or details have been omitted, the Contractor shall notify the Architect in writing of such discrepancy or omission at least ten days prior to bid date. Failure to do so shall be construed as the willingness of this Contractor to supply all necessary materials and labor required for the proper completion of this work.

1.7 AS-BUILT DRAWINGS

A. See requirements regarding Record Drawings stated elsewhere in these specifications.

B. At the beginning of the work, the Contractor shall set aside one complete set of the drawings which shall be maintained as a complete "As-Built" set. Notations shall be done in a neat and legible manner in accordance with Architect's instructions.

C. Show the dimensioned location and routing of all electrical work which will become permanently concealed. Show routing and location of items cast in concrete or buried underground. Show routing of work in permanently concealed blind spaces within the building. Show complete routing and sizing of any significant revisions to the systems shown.

D. Provisions for future connection shall be shown on the "As-Built" drawings and shall be referenced to the building lines or approved bench marks.

E. The "As-Built" drawings shall be updated daily by the foreman to show every change from the original drawings and the exact locations, sizes and kinds of equipment. This set of drawings shall not be used for any other purpose and shall be maintained at the job site and available for review at any time.

F. Provide three copies of wiring diagrams for all individual special systems as installed.

Identify all components and show all wire and terminal numbers and connections.

G. At completion of project, deliver these drawings to the Owner and obtain written receipt.

1.8 CODES, STANDARDS AND REGULATIONS

A. Codes: Perform all work in strict accordance with all applicable national, state and local codes; including, but not limited to the latest legally enacted editions of the following specifically noted requirements:

1. NFPA 70, National Electric Code - NEC
2. NFPA 72, National Fire Alarm Code
3. ANSI-C2, National Electrical Safety Code - NESC
4. Uniform Building Code - UBC
5. Uniform Fire Code - UFC

B. Standards: Reference to the following standards infers that installation, equipment and material shall be within the limits for which it was designed, tested and approved, in conformance with the current publications and standards of the following organizations:

1. American National Standards Institute - ANSI
2. American Society for Testing and Materials - ASTM
3. American Society of Heating Refrigerating and Air Conditioning Engineers ASHRAE (Standard 90-75)
4. Institute of Electrical and Electronics Engineers - IEEE
5. Insulated Cable Engineers Association - ICEA
6. National Electrical Contractors Association - NECA
7. National Electrical Manufacturers' Association - NEMA
8. National Fire Protection Association - NFPA
9. Underwriters' Laboratories, Inc. - UL

C. Regulations: Design has been performed in accordance with applicable regulations and guidelines noted below. The Contractor shall carefully apply these regulations and bring any discrepancies to the immediate attention of the Architect/Engineer.

1. Americans with Disabilities Act - ADA

1.9 PERMITS AND INSPECTIONS

A. The Division 16 Contractor shall pay for all permits or fees in connection with the work. Fees shall include any or all user fees, government fees, system development fees, connection fees or other fees that are required to be paid before the systems can be connected or used.

B. Schedule all required electrical inspections with local electrical inspector. Notify engineer of all items of discrepancy brought to the attention of the contractor by the electrical inspector if those items affect the cost or function of the system, or if they conflict with the electrical drawings and specifications.

C. Deliver all inspection certificates to the Architect prior to final acceptance of the work.

1.10 RESPONSIBILITY

A. The Contractor shall be responsible for the installation of a complete and functional piece of work in accordance with the true intent of the drawings and specifications. He shall provide all incidental items required as part of his work for complete and satisfactory operation of equipment, whether or not specifically noted in contract documents.

1.11 CONTRACTOR'S QUALIFICATIONS

A. GENERAL

1. The Contractor shall employ in connection with construction of this project, capable, experienced and reliable foreman and such skilled workmen as may be required for the various classes of work to be performed.
2. Where special skills and certification are required, as for work listed in this section or elsewhere in this specification, the Contractor shall ensure that the work is performed by an individual or individuals with the required experience, skill and certification.
3. If, in the opinion of the Engineer, the Contractor's employees do not possess the

necessary qualifications to perform the specific specialty work, the Contractor will be required to obtain the services of workmen who are certified and approved by the manufacturer. These workmen, if required, shall be provided at no additional expense to the Owner.

1.12 GUARANTEE - WARRANTY

A. The Contractor shall and hereby does warrant and guarantee:

4. That all work executed under this Contract shall be free from defects in materials and workmanship for a period of one year from the date of substantial completion of this work, except where longer periods are specifically called for.

5. The Contractor further agrees that he will, at his own expense, repair and replace all such defective materials and all other material damaged thereby, which becomes defective during the term of warranty.

B. All warranty periods shall run from the date of substantial completion. Unless specifically noted otherwise.

C. Exceptions

1. Any other specific warranties, of duration greater than one year, as called out in other sections of this specification, shall be honored for that period of time specified.

PART II - PRODUCTS

2.1 GENERAL

A. Materials used under this Contract, unless specifically noted otherwise, shall be new, shall be of the best quality of their respective kind and shall conform to the latest Standard Specifications of the American Society for Testing Materials, National Electrical Manufacturers' Association, National Board of Fire Underwriters or other appropriate agency. Standard items shall bear the stamp indicating listing by Underwriter's Laboratories, Inc. when such listing is available. Custom-designed items shall be fabricated of UL approved materials.

B. Throughout these specifications various materials, equipment, apparatus, etc., are specified by manufacturer, brand name, type or catalog number. Such designations are to establish standards of desired quality and construction and shall be the basis of the bid.

C. Manufacturer's Directions

1. All equipment and material shall be applied, installed, connected, erected, used, cleaned and conditioned in strict accordance with the manufacturer's recommendations.

2. Manufacturer's installation instructions shall supersede requirements of specs and plans when a conflict arises. This situation shall be brought to the attention of the Engineer.

2.2 OWNER FURNISHED EQUIPMENT AND MATERIALS:

A. The Contractor shall accept and become responsible for all owner furnished equipment and materials. Inspect all equipment and materials to determine suitability for installation. Immediately notify the Owner of any defects or deficiencies. Failure to so notify the Owner shall indicate that the Contractor warrants that all equipment and materials are of the proper quantity, design and are free from all defects.

2.3 SUBSTITUTION OF MATERIALS

A. APPROVED MANUFACTURERS

1. In Equipment and Fixture Schedules on the contract drawings and in other sections of this specification the following verbiage many be found: "Products of equivalent or greater quality and performance characteristics manufactured by "X", "Y", or "Z" may be substituted without prior approval. Where this verbiage is found, it is the Contractor's responsibility to ensure that the item by the particular manufacturer "Y" which is used for bidding purposes is truly equivalent to that specified. If it is not equivalent, it will be rejected at the shop drawing stage and the contractor shall

supply the specified item at his own cost.

2. Where the above mentioned statement is made, it is understood that the manufacturers listed may not actually have an equivalent product to that specified. If the contractor/distributor has any questions regarding the desired product characteristics and the suitability of the proposed substitution, he is encouraged to submit for prior approval.

B. PRIOR APPROVALS

1. Where the above mentioned verbiage is not employed, the equipment and materials that are specifically identified by manufacturer's name, model or catalog number are open for substitution prior to bid opening only. Manufacturers desiring approval shall submit catalog cuts which define quality of product and ability to perform as specified. Submittals shall arrive at the Engineer at least ten (10) days prior to bid opening. All approvals will be listed in the last addendum as being approved to bid. Items substituted but not listed in spec or as a prior approved item will not be considered if submitted on shop drawings.
2. Where substituted equipment requires, structural, architectural, mechanical, plumbing or electrical work that differs from the basic design, the cost of all changes, including re-design, shall be the responsibility of the contractor using the substitution.
3. Approval of substitute equipment is on the basis of quality only. Materials supplier shall be responsible for his quotation reflecting proper selection of his particular equipment in conformance with the plans and specifications with regard to proper capacities, physical dimensions, requirements and intended function. Engineer will not give approval to specific model numbers or check capacities, dimensions, or requirements. Evaluation will be on the basis of quality and equality to specified items.

C. SAMPLES

1. Where, in the Engineer/Architect's opinion, a product sample is required in order to determine the appearance, quality, workmanship or operation, the Contractor shall submit actual production samples of the item in question.
2. Samples will be returned to the Contractor. Approved samples may be used on the job.
3. All costs incurred in providing and returning samples will be the responsibility of the Contractor.

2.4 PRODUCT AND SYSTEM SUBMITTALS

A. See General Conditions, "Submittal of Information."

B. Provide six (6) sets submittal packages for the products and systems described in Schedule of Submittals to demonstrate compliance with the requirements of the project.

C. Shop drawings shall be for the actual equipment and hardware which will be installed on this project. Submittals which include more than one manufacturer or part number for a specified item will be rejected.

D. SCHEDULE OF SUBMITTALS

SECTION - ITEM	**A**	**B**	**C**	**D**	**E**	**F**	**G**	**H**	**I**	**J**
261100 - Conduit & Fittings		B								
261200 - Wire and Cable		B								
261300 - Enclosures		B								
263213 – Emergency Generator						F		H		J

263623 – Automatic Transfer Switch						F		H		J

A - **Prior Approvals** Provide under timetable and conditions listed above.
B - **Certificate of Compliance** Provide under timetable listed below for shop drawings.
C - **Installer's Qualifications** Provide under time-table listed below for shop drawings.
D - **Color Selection** Provide under timetable listed below for shop drawings.
E - **Production Model Samples** Provide under timetable listed below for shop drawings. (Contact Engineer for specific items requiring samples).
F - **Shop Drawings** Provide under timetable listed below.
G - **Wiring Diagrams** Provide under timetable listed below for shop drawings.
H - **Manufacturer's Recommendations for Installation, Setup and Use** Provide under timetable listed below for shop drawings.
I - **Test Reports** Provide as required elsewhere in this specification.
J - **Operation and Maintenance Instructions**

Note that information in columns F, G, H, I & J shall be included in O&M Manuals.

E. Submit shop drawings not later than 30 days after award of contract or, in any case, to allow sufficient time for review without delaying construction. Furnish equipment submittals in the manner described elsewhere in these specifications. In addition, include data for review, and organize data, as noted below:
   1. Specification reference and/or drawing reference for which literature is submitted for review with an index, following specification format, and item by item identification.
   2. Manufacturer's name and address, and supplier's name, address and phone number.
   3. Catalog designation or model number.
   4. Rough-in data and dimensions.
   5. Operation characteristics.
   6. Complete customized listing of characteristics required. Indicate whether item is "As Specified" or "Proposed Substitution." Indicate any deviations on submittal. Mark out all non-applicable items. The terminology "As Specified" used without this customized listing is not acceptable.
   7. Wiring diagrams for the specific system.
   8. Working construction drawings (shop drawings).
   9. Color charts for selection of standard factory finishes, or special finishes as indicated for each item.

F. Submittal Data: Prior to the submission of the required shop drawings, hold a meeting with all the trades and check the shop drawings for discrepancies, dimensional errors, omissions, contradictions and departures from the contract requirements. The shop drawings shall then be corrected and submitted with appropriate notes. Submittal of shop drawings which affect other trades indicates that coordination has been done and that all parties are in agreement as to who provides, installs and connects the various hardware and equipment.

G. All submittals shall be accompanied by a transmittal letter indicating date, project name, contractor's name and address, product description/type, and deviations from contract documents if any.

H. The Contractor shall approve and sign all shop drawings prior to submitting same for review. Drawings received without the Contractor's note of approval will be subject to return without review. This required approval is in addition to any notation the general contractor may apply to the shop drawings.

I. With prior permission from the Engineer, partial submittals will be considered for review provided that they are complete sections, as listed below:
   1. Section 263000 equipment

J. Mark submittal literature and shop drawings clearly and bind 8½" x 11" literature in three-hole loose-leaf binders by individual sets.

K. Shop drawings on substituted equipment shall include required project drawings and engineering changes that are necessary to implement installation of the substituted equipment.

L. Submittal review is for general design and arrangement only and does not relieve the Contractor from any of the requirements of the Contract Documents. Submittals will not be checked for quantity, dimension, fit or proper technical design of manufactured equipment. Where deviations of substitute product or system performance have not been specifically noted in the submittal by the Contractor, provision of a complete and satisfactory working installation of equal quality to system specified is the responsibility of the Contractor.

M. Submittals which are not in strict compliance with these standards will be rejected.

2.5 SUB-CONTRACTORS

A. With the shop drawing submittals, the Contractor shall submit a list of all sub-contractors to be used on the project including, but not limited to: Fire alarm system, security system, clock and program system, nurse call system, PA system, telephone/intercom system, etc.

2.6 OPERATION AND MAINTENANCE MANUALS

A. Upon completion of Contract, the Contractor shall digital copies of operation and maintenance manuals containing data pertinent to equipment and systems on the job.

B. Provide a separate chapter for each section of the electrical specifications with sub-chapters for each class of equipment or system. Provide a table of contents for each chapter, and each major item in each chapter, to indicate the page number of each. Label all pages to assure correct placement in manual. Identify each piece of equipment with its associated specification description.

C. Maintenance Instructions for panelboards, safety switches, heating cable systems and any motor controls:

1. Provide complete information for preventive maintenance for each product, including recommended frequency of performance for each preventive maintenance task.
2. Provide instructions for minor repair or adjustments required for preventive maintenance routines, limited to repairs and adjustments which may be performed without special tools or test equipment and which require no extensive special training or skills.
3. Provide all information of a maintenance nature covering warranty items, etc., which have not been discussed in the manufacturers literature or the operating sequence narrative.
4. Provide complete information data for all the spare and replacement parts for each product and system. Properly identify each part by part number and manufacturer.

D. Manufacturers' Brochures: Contractor shall coordinate with the lighting and lighting control supplier to include appropriate information in the O&M manuals.

E. Submit one copy of the manual to the Engineer for approval prior to preparation of final copies. The final copies shall incorporate any changes or additions deemed necessary by the Engineer and shall bear their stamp of approval. After approval, the final copy of the manual shall be turned over to the Owner. This shall take place prior to authorization of final payment.

PART III - EXECUTION

3.1 SITE EXAMINATION

A. Prior to submitting a bid, the Contractor shall visit the site of the proposed work and familiarize himself with the conditions affecting the work. Allowance shall be made in the bid for these conditions and no additional allowance shall be granted because of lack of knowledge of such conditions.

B. The Contractor shall verify all measurements at the building site.

C. Prime Electrical Contractors may be required to attend a pre-bid walk-through of the project in order to bid. See Advertisement for Bids.

3.2 CONTRACTOR'S USE OF SITE AND PREMISES

A. Restricted Use of Site: Contractor shall have limited use of Project site for construction operations as indicated on Drawings by the Contract limits and as indicated by requirements of this Section.

1. Driveways, Walkways, and Entrances: Keep driveways, loading areas and entrances serving premises clear and available to Owner, Owner's employees, and emergency vehicles at all times. Do not use these areas for parking or for storage of materials. DO NOT BLOCK FIRE EXITS, TYPICAL TRAVEL PATHS FOR MILITARY EQUIPMENT OR EMERGENCY EXITS.

B. All work must be coordinated with the Owner at all times and Owner must be informed about any work scheduling 48 hours in advance of work being conducted and shall require Owner's written approval.

1. Any electrical system shutdowns and shutdown durations shall be coordinated with the owner, in writing, 2 weeks in advance of anticipated shutdown. Writing notice to proceed shall be received from the owner prior to beginning any work.

C. The Contractor shall protect existing building and site structures from any and all damage during this work and if damages occur shall repair same to its original condition as approved by the Owner.

D. The Contractor shall confine his apparatus, the storage of materials and the operation of his workmen to limits by law, ordinances, permits or direction of the Owner and shall not unreasonably encumber the premises with materials.

E. The Contractor shall not load or permit any part of any structure to be loaded with weights that will endanger the building or its occupants. Note that the existing piping distribution tunnels are not strong enough to run any equipment over. These areas are clearly defined on the site plan. Plan work to avoid having to cross these areas.

F. Contractor and Owner shall establish a staging area for storage of materials and equipment.

G. The Contractor and all workers entering the site shall check in with the Owner as well as the building manager each day prior to entering the site or beginning any work.

H. Do not unreasonably encumber the site with materials or equipment. Confine stockpiling of materials to the areas designated by the Owner. If additional storage is necessary, obtain and pay for such storage off-site.

I. All precautions must be made by the Contractor to insure full and proper safety of all building personnel, workers, and related peoples as well as construction personnel and its related people. All application, material handling, and associated equipment shall conform to and be operated in conformance with OSHA safety requirements. Comply with Federal, State, Local and Owner fire and safety requirements.

J. The Contractor shall erect and maintain, as required by law, conditions and progress of the work, warning signs, barricades and other reasonable safeguards for safety and protection.

K. The Contractor is to coordinate with the Owner for the location of Job Site Trailer Office if required.

L. Existing Premises Conditions: The Contractor is responsible for adequately documenting the existing condition of the premises, specifically the condition of the ceiling systems and cleanliness of areas. Any damage to the premises which is found after construction and is not so documented will be the responsibility of the Contractor to repair or replace.

3.3 COORDINATION WITH OCCUPANTS

A. Full Owner Occupancy: Owner will occupy site and existing building(s) during entire construction period. Cooperate with Owner during construction operations to minimize conflicts and facilitate Owner usage. Perform the Work so as not to interfere with Owner's day-to-day operations. Maintain existing exits unless otherwise indicated.

3.4 WORK RESTRICTIONS

A. Comply with restrictions on construction operations.

1. Comply with limitations on use of public streets, work on public streets, rights of way, and other requirements of authorities having jurisdiction.

2. On-Site Work Hours: Limit work in the existing building to normal business working hours of

07:30 a.m. to 05:00 p.m., Monday through Friday, unless otherwise indicated. Coordinate with Owner.

B. Existing Utility Interruptions: Do not interrupt utilities serving facilities occupied by Owner or others unless permitted under the following conditions and then only after providing temporary utility services according to requirements indicated:
   1. Notify Owner not less than 72 hours in advance of proposed utility interruptions.
   2. Obtain Owner's written permission before proceeding with utility interruptions.

C. Noise, Vibration, Dust, and Odors: Coordinate operations that may result in high levels of noise and vibration, dust, odors, or other disruption to Owner occupancy with Owner.
   Notify Owner not less than 72 hours in advance of proposed disruptive operations.
   Obtain Owner's written permission before proceeding with disruptive operations.

D. Smoking and Controlled Substance Restrictions: Use of tobacco products, alcoholic beverages, and other controlled substances on Owner's property is not permitted. Comply with all State and Federal Regulations.

3.5 COORDINATION

D. The Electrical Contractor shall consult <u>all</u> drawings for the project, shop drawings of other trades, and actual building dimensions, to predetermine that his work and equipment will fit as planned. Do not scale drawings for fabrication. No extra payment will be issued for materials or items which do not fit because of Contractor's failure to verify as-built building dimensions.

E. The Contractor shall check the location of fixtures, outlets, equipment, conduit, etc., to determine they clear all openings, structural members, piping, ducts and miscellaneous equipment having fixed locations.

F. If at any time, and in any case, changes in location of electrical work becomes necessary due to obstacles or installation of other trades shown on the drawings, such required changes shall be made by Electrical Contractor at no extra cost.

G. Lay out all the work in advance and avoid conflict with other work in progress. Physical dimensions shall be determined from architectural and structural plans. Verify locations for junction boxes, disconnect switches, stub-ups, etc., for connection to equipment furnished by others, or in other Divisions of this work.

H. The Electrical Contractor shall coordinate and plan his work to proceed with the work of other trades.

I. The Contractor shall check dimensions of all electrical equipment installed, provided by himself or by others, so correct clearances and connections can be made.

J. The Contractor shall be responsible for the correct size and locations of chases and openings whether provided by the General Contractor or himself.

3.6 WORKMANSHIP

A. CUTTING & PATCHING
   1. Obtain written permission of the Architect/Engineer before cutting or piercing structural members.
   2. Sleeves through floors and walls shall be black iron pipe, flush with walls, ceilings or finished floors, sized to accommodate the raceway. Grout all penetrations through concrete walls or floors. Holes through existing concrete and concrete block (CMU) shall be core drilled.

B. FIRE PROTECTION
   1. Metallic conduit, duct and other penetrations of all fire partitions, walls and floors shall be effectively fire-stopped to equal the fire rating of the floor or partition using materials and methods UL approved and tested to meet all conditions of ASTM E119, UL 1479 and ASTM 814 tests. One such material is Carborundum bulk "Fiberfrax" fiber packing for filling the annual space between pipe and sleeve or hole and Fiberfrax LDS moldable caulking for sealing in the fiber packing. Other acceptable materials are Dow Corning 3-6548 Silicon RTV foam firestop system, General Electric 'Pensil' 851 system or U.S.G. fire code compound and

Thermafire.

2. PVC conduit and duct penetrations to be fire stopped same as metallic penetrations with the addition of an intumescent wrap to effectively close the hole if PVC vaporizes.
3. Construction of permanent bracing, framing, roof curbs and platforms or other structures which utilize wood construction shall be fabricated from fire resistant treated materials or shall be otherwise protected by approved fire resistant materials.

3.7 TESTS AND INSPECTIONS

A. Operating Tests: At completion of work, or upon request from the Architect/Engineer, place the entire electrical installation, and/or any portion thereof, in operation to demonstrate satisfactory operation.
B. Prior to final test, all switches, panelboards, devices, and fixtures shall be in place.
C. Test all electrical systems. They shall be free from short circuits and unintentional grounds.
D. Make all changes necessary to balance the connected electrical loads on the complete system. Arrange for balanced conditions of circuits under connected load demands, as contemplated by the normal working conditions. Final load and balance test shall be demonstrated in the presence of the Architect/Engineer.
E. Deficiencies: Immediately correct all deficiencies which are evidenced during the tests and repeat tests until system is approved. Do not cover or conceal electrical installations until satisfactory tests are made and approved.
F. Furnish one (1) copy of certified test results to the Architect/Engineer prior to final inspection and include one (1) copy in the O&M Manual.

3.8 CLEAN-UP AND COMMISSIONING

A. Throughout the work, the Contractor shall keep the work area reasonably neat and orderly by periodic clean-ups.
B. Upon completion of work, remove materials, scraps, etc., relative to this work and leave premises in clean and orderly condition. This includes all tunnels, attics, ceiling and crawl spaces.
C. Clean equipment of dirt and debris, including interior of panels, outlet boxes, etc. Remove labels from and clean all fixture lenses.
D. As independent parts of the installation are completed, they may be commissioned and utilized during construction.

3.9 PROJECT COMPLETION AND DEMONSTRATION

A. Tests: During final inspection, conduct operating tests for approval. Demonstrate installation to operate satisfactorily in accordance with requirements of Contract Documents. Should any portion of installation fail to meet requirements of Contract Documents, repair or replace items failing to meet requirements until items can be demonstrated to comply.
B. Have instruments available for measuring light intensities, voltage and current values and for the demonstration of continuity, grounds, or open circuit conditions.
C. Furnish personnel to assist in taking measurements and making tests. In the event that systems are not complete and fully operational at the time of final inspection, all costs of any subsequent inspections shall be borne by the Contractor at no additional cost to the Owner.

3.10 OWNER ORIENTATION AND TRAINING

A. The Contractor shall instruct the Owner as to function, operation, maintenance and adjustment of each piece of equipment and system provided. The Contractor shall set aside one day for this instruction at which the Owner or Owner's representative (preferably the person who will be maintaining the particular system) shall be present. Provide written verification to the Architect/Engineer that instruction was given, listing who was present. Final payment will not be made until this is received.
B. The Contractor shall supply on-site training at the owner's facility for the lighting control system. The training shall continue until the Owner is fully satisfied that he understands the operation of his system and shall be conducted by a full time employee of the particular

system manufacturer. The training shall cover installation, operation, maintenance and troubleshooting of the system.

C. The Contractor shall provide the Owner or Owner's representative with a copy of the "O&M Manuals" as called for in the specifications. This manual shall be used during the instruction period to familiarize the Owner with the booklet.

3.11 CONTRACT COMPLETION CHECK-LIST - The following is a general, non-exhaustive check-list of items which the contractor shall complete before making a final payment request.

	Completion of all work on contract drawings including addenda, change orders, etc.
	Final inspections passed and all pickup items completed. Evidence of inspection passed given to Architect/Owner.
	Owner orientation and training completed to Owner's satisfaction.
	O&M Manual with Engineer's review and approval turned over to Owner.
	Start-up, Testing and Commissioning reports submitted and approved.
	As-built drawings turned over to Architect/Owner.

End of Section

SECTION 26 0200

LOCAL SITE CONDITIONS

PART I - GENERAL

1.1 DESCRIPTION - This section describes general requirements and methods of execution relating to local conditions on the project.

PART II - PRODUCTS

2.1 Products and equipment required in this section shall be as specified in other portions of this specification.

PART III - EXECUTION

3.1 Excavation and Backfilling

A. Perform excavation for installation of electrical systems.

B. Install a 4" wide strip of bright orange or red plastic tape at 6-9" above any buried conduits as a warning strip. Klein #58003, ITT Blackburn Type RT; Griffolyn Terra Tape or equal.

C. Backfill only after approval of Engineer.

1. Remove all trash and debris.
2. Use clean material, free of debris with sufficient moisture and proper compaction.
3. Backfill placed in horizontal layers not exceeding 12 inches in thickness and properly moistened to approximate optimum requirements. Each layer compacted by hand, machine tampers or other suitable equipment to density that will prevent excessive settlement or shrinkage. Backfill brought to suitable elevation above grade for anticipated settlement or shrinkage. Any excavating done under building supports, and in or under driveways and sidewalks compacted to 95% density of adjacent undisturbed earth.

End of Section

SECTION 260500

IDENTIFICATION

PART I - GENERAL

1.1 IDENTIFICATION

A. Equipment Labels and Nameplates:

1. Provide rigid engraved labels and nameplates of laminated plastic 1/16 inch thick with white letters on a black or gray background. Label emergency equipment red with white letters.
   a. Securely attach labels with two screws, minimum, per label. Adhesives or glue not acceptable.
   b. Temporary markings not permitted on equipment. Repaint trims, housings, etc., where markings cannot be readily removed. Refinish defaced finishes.
   c. No labeling abbreviations will be permitted without prior approval.
2. Label and Nameplate Locations:
   a. Provide ½" minimum height letters on following equipment:
      i. Service disconnect (red background).
      ii. Secondary feeder breakers in distribution equipment. Designation as required by load served.
      iii. Special equipment housed in cabinets, as designated on plans, on outside of door.
      iv. Panelboards, switchboards, motor control centers, as designated on plans, on outside of door.
   b. Provide ¼" minimum height letters on:
      i. Disconnects and starters for motors or fixed appliances.
      ii. Designated electrical equipment.
   c. Provide 1/8" minimum height, engraved device plates on switches and receptacles where item controlled is not visible from the switch, or as noted on drawings.
   d. Provide 1/8" minimum height letters on lighting control relays, dimmer controls and remote lighting control equipment.
3. Fuse labeling - Provide laminated plastic label on the interior of every fused safety switch or fused device over 5 amps. Label to read "Replace with 400-LPN-RK fuses only" or as appropriate for size and type of fuse as specified or installed.

B. Conduits: Mark all conduits entering or leaving panelboards with indelible black magic marker with the circuit numbers of the circuits contained inside.

C. Junction Boxes: Mark the circuit numbers of wiring on all junction boxes with sheet steel covers. Mark with indelible black marker. On exposed junction boxes in public areas, mark on inside of cover.

End of Section

SECTION 261000

BASIC MATERIALS AND METHODS

PART I - GENERAL

1.1 DESCRIPTION - This section describes specific requirements, products, and methods of execution which are typical throughout the electrical work of this project. Additional requirements for the specific systems may modify these requirements.

1.2 SERVICEABILITY OF PRODUCTS

A. Furnish all products to provide the proper orientation of serviceable components to access space provided.

B. Coordinate installation of panels, equipment, system components, and other products to allow proper service areas for all items requiring periodic maintenance inspection or replacement.

C. Replace or relocate all products incorrectly ordered or installed.

1.3 ACCESSIBILITY OF PRODUCTS

A. Arrange all work to provide access to all serviceable and/or operable products. Layout work to optimize net usable access space within confines of space available. Advise Architect/Engineer, in a timely manner, of areas where proper access cannot be maintained. Furnish layout drawings to verify this claim, if requested.

B. Provide access doors in ceilings, walls, floors, etc., for access to junction boxes, automatic devices, and all serviceable or operable equipment in concealed spaces.

PART II - PRODUCTS

2.1 MATERIALS AND EQUIPMENT FURNISHED IN DIVISION 26

A. All materials furnished and installed in permanent construction shall be new, full-weight, standard in every way, and in first class condition.

B. All materials shall conform with the standards of Underwriters Laboratories or other organization acceptable to the authority having jurisdiction and concerned with product evaluation, that maintains periodic inspection of labeled equipment or materials and by whose labeling the manufacturer indicates compliance with appropriate standards or performance in a specified manner. Only materials designed for the purpose employed shall be used.

C. Materials shall be identical with apparatus or equipment which has been in successful operation for at least two years. All materials of similar class or service shall be of one manufacturer.

D. Capacities, sizes, and dimensions given are minimum unless otherwise indicated. All systems, materials and equipment proposed for use on this project shall be subject to review for adequacy and compliance with contract documents.

2.2 MATERIALS AND EQUIPMENT FURNISHED IN OTHER DIVISIONS

A. Controls, including conduit, wiring, and control devices required for the operation of systems in other divisions of the specifications will be furnished under the division in which the equipment is specified.

B. All work on the project that falls under the jurisdiction of the electrical trade shall be performed by Licensed Electricians in conformance with the electrical specifications.

C. Provide complete power connections to equipment including but not limited to feeders, connections, disconnects and motor running overcurrent protection. Where starters are provided as part of a packaged equipment, overcurrent heaters shall be provided by the Electrical Contractor.

PART III - EXECUTION

3.1 STORAGE AND HANDLING - All items shall be delivered and stored in original containers, which shall indicate manufacturer's name, the brand, and the identifying number. Items subject to moisture

and/or thermal damage shall be stored in a dry, heated place. All items shall be covered and protected against dirt, water, chemical and/or mechanical damage.

3.2 PROTECTION OF MATERIALS AND EQUIPMENT - The Contractor shall be held responsible for any and all materials and equipment to be installed under this contract. The Contractor will be required to make good at his own cost any injury or damage which said materials or equipment may sustain from any source or cause whatsoever before final acceptance.

3.3 INSTALLATION

A. All materials and equipment shall be installed by skilled craftsmen. The norms for execution of the work shall be NEC Chapter 3 and the National Electrical Contractors' Association "Standards of Installation", which herewith is made part of these specifications.

B. Repair all surfaces and furnish all required material and labor to maintain fireproof, airtight and waterproof characteristics of the construction.

C. Installation of all equipment shall be in accordance with manufacturers' instructions.

3.4 SUPPORT SYSTEMS

A. Pipe straps and hanger rods shall be fastened to concrete by means of inserts, expansion bolts, or power-driven fasteners, to brickwork by means of expansion bolts, and to hollow masonry by means of toggle bolts.

B. Hanger rods with spring steel fasteners may be used for 1½" EMT and smaller conduits in dry locations.

C. Cable trays, multi-conduit runs, etc., shall be supported by double rods at each point of support and be supported independently of any other building system using products manufactured by Kindorff, Unistrut, B-Line or equal.

3.5 PROTECTIVE FINISHES

A. Take care not to scratch or deface factory finish of electrical apparatus and devices. Repaint all marred or scratched surfaces.

B. Provide hot dip galvanized components for ferrous materials exposed to the weather.

End of Section

SECTION 261100

CONDUIT AND FITTINGS

PART I - GENERAL

1.1 DESCRIPTION - This section describes specific requirements, products, and methods of execution relating to conduit and conduit fittings approved for use. Type, size and installation methods shall be as shown on drawings, required by code and specified herein.

1.2 QUALITY ASSURANCE - Conduit and conduit fittings shall be standard types and sizes as manufactured by a nationally recognized manufacturer of this type of materials and shall be in conformity with applicable standards and UL listings.

PART II - PRODUCTS

2.1 CONDUIT - Where installed using methods and locations specified in this section, the following conduit types are approved:

A. Galvanized rigid steel conduit - GRC (NEC Article 344)
B. Electrical metallic tubing - EMT (NEC Article 358)
C. Flexible metallic conduit (NEC Article 348)
D. Liquid-tight flexible metallic conduit - LTMC (NEC Article 350)
E. Polyvinyl Chloride Conduit - PVC Schedule 40 (NEC Article 352)

2.2 FITTINGS

A. All connectors and couplings shall have insulated throats.
B. Fittings utilized with rigid steel conduit shall be galvanized steel. Conduit bushings shall be insulated. Where grounding bushings are required, insulated grounding bushings with pressure type lugs shall be provided.
C. Fittings for liquid-tight flexible conduit shall be steel incorporating a threaded grounding cone, nylon or plastic compression ring, and a tightening gland to provide a low resistance ground connection.

2.3 EXPLOSION PROOF FITTINGS (ALSO USED AS MOISTURE BARRIERS)

A. Fittings shall be NEMA and UL listed for Class and Division in which they are installed.
B. Install EYS vertical conduit seal at each boundary of any classified envelope, at other locations required by NEC, and where moisture barrier is required.
C. Install fiber fill and sealing cement in conduit seals according to manufacturer's recommendations. All plugs shall be installed with non-conductive thread/joint lubricant such as Appleton TLNC.

PART III - EXECUTION

3.1 LOCATION - Conduits installed using methods noted in this section and in the following locations shall be of the following types:

A. Underground or encased in concrete - rigid steel or PVC (aluminum conduit shall not be installed in concrete).
B. Outdoors above-ground or damp locations - rigid steel.
C. Dry indoor locations, exposed - rigid steel, EMT or flexible conduit.

3.2 INSTALLATION METHODS

A. All conduit and tubing shall be cut square and reamed smooth at the ends and all joints made tight. Conduit threads shall be lubricated with an approved thread lubricant.
B. Exposed raceways shall be run parallel or perpendicular to building lines and bent symmetrically or made up with standard elbows or fittings. Concealed raceways shall be routed as directly as possible with a minimum of bends.

C. Flexible conduit (metallic or liquid-tight) shall have ground wire regardless of length. The ground wire in flexible conduits may be bonded to the exterior of the conduit. Flexible conduit shall not exceed 36" in length, except for lighting fixture whips or where specifically noted.
   1. Flexible metallic conduit shall only be used for the following:
      a. Connection to lay-in light fixtures.
      b. Vibrating equipment other than motors.
      c. Where installation conditions warrant its use. (Must have Engineer's approval in writing.)
   2. Liquid-tight flexible conduit shall be used for all motor connections.

D. Each conduit shall enter and be securely connected to a cabinet, junction box, pull box or outlet box by means of a locknut on the outside and a locknut bushing on the inside, or by means of a liquid-tight, threaded, self-locking, cold-weld type wedge adapter. In EMT or flexible metal conduit, the one locknut shall be made wrench tight. All locknuts shall be the bonding type with sharp edges and shall be installed in a manner that will assure a locking installation. Locknuts and bushings or self-locking adapters will not be required where conduits are screwed into threaded connections. All runs of conduit shall be protected from the entrance of foreign material prior to the installation of conductors.

E. Conduit or tubing deformed or crushed in any way shall not be installed. Conduit shall be bent only with approved bender (hydraulic or hickey). Bending machines shall be used to make field bends in conduit of 1¼" size and larger. Torches shall not be used in making conduit bends.

F. Raceways shall be run at least 5" from parallel runs of heating system pipes, flues, or other high temperatures piping systems.

G. Pull wires shall be left in all spare and unused conduits. (Nylon "jet-line" or equal.)

H. All conduit stubbed up out of floor and terminating inside of an enclosure shall have insulating grounding bushings installed.

I. Raceways penetrating vapor barriers or traversing from warm to cold areas shall be sealed with a non-hardening duct sealing compound to prevent the accumulation of moisture.

J. Raceways shall be provided with expansion joints where necessary to allow for thermal expansion and contraction.

K. PVC conduit may be used for power and telephone service where installed underground. Rigid steel elbows required underground and rigid steel conduits shall rise exposed.

3.3 CONDUIT SIZES - Conduits shall be of the size shown on the drawings or as required by NEC, whichever is larger. Base sizes on using type THW wire for size #6 AWG or larger, and type THWN for size #8 AWG or smaller.

A. Minimum sizes for rigid steel conduits shall be 3/4".

B. Minimum size for EMT and flexible conduits shall be 1/2", except fixture whips which may be 3/8" as allowed by NEC.

C. Maximum size for EMT shall be 3".

D. Minimum size for conduits installed underground or encased in concrete shall be 1".

End of Section

SECTION 261200

WIRE AND CABLE

PART I - GENERAL

1.1 DESCRIPTION -This section describes specific requirements, products, and methods of execution relating to wire and cable, 600 volts or less, approved for use on this project.

1.2 QUALITY ASSURANCE - All conductors shall be sized according to American Wire Gauge (AWG). Stranding, insulation, rating and geometrical dimensions shall conform to UL and ICEA specifications.

PART II - PRODUCTS

2.1 SERVICE AND FEEDER CABLE - Insulation shall be 600 volt type THW, RHW, THHN or XHHW.

2.2 BRANCH CIRCUIT WIRING - Insulation shall be 600 volt type THW, THHN or XHHW. Wiring in fixture channels shall be rated 90 degrees C or over, 600 volt.

2.3 MC CABLE - Metal-clad (MC) cable can be used only for tight connections made interior to the building, where allowed by the NEC. Conduit must be installed in walls and in all exterior locations.

2.4 NM, NMC and NMS CABLE - Under NO circumstance shall Nonmetallic-sheathed cable (ROMEX) be used.

2.5 WIRES CONNECTED TO HEATING DEVICES - Wire type and rating shall be in accordance with heater manufacture's guidelines.

2.6 FLEXIBLE CORD - All flexible cord shall be type SO or ST. For the larger size cable, cord shall be type G.

2.7 MISCELLANEOUS - Miscellaneous wire and cable for special purpose applications and not covered in the categories as indicated above, shall be as shown on the plans and/or required by the intended use.

2.8 MINIMUM SIZE - Unless specified otherwise minimum wire sizes shall be as follows:

- A. #12 AWG for branch circuit wiring.
- B. #14 for control circuit wiring.
- C. #10 AWG for all 120V homeruns over 75'.
- D. #20 AWG for low voltage switching circuits if part of an approved cable assembly, #18 AWG otherwise.
- E. Cable or conductors for fire alarm systems and other special systems shall be as described in other sections of the specifications, noted on the drawing, or recommended by the equipment manufacturer, whichever is greatest.

2.9 CONDUCTORS

- A. All conductors used on this project shall be copper, solid or stranded for sizes #10 and smaller, stranded for #8 and larger.
- B. Aluminum conductors shall be NOT be used.
- C. Stranded control, communication, and alarm conductors shall have compression terminations where terminated on screw terminals.

PART III - EXECUTION

3.1 INSTALLATION

- A. Conduit shall be completely installed, free from obstructions, and clean before conductors are installed. Provide conductors from outlet to outlet and splice only at outlet or junction boxes. Install all conductors in a single raceway at one time and leave sufficient cable at all fittings or boxes. Keep all conductors within the manufacturer's allowable tension. Do not violate minimum bending radii.

B. Lubricants for wire pulling, if used, shall conform to UL requirements for the insulation and raceway material.

C. Do not install thermoplastic insulated conductors when the ambient temperature is below 0 degrees F.

D. Provide pull boxes and /or condulets so no one conductor pull will be more than 50'.

3.2 TERMINATIONS AND SPLICING

A. No splicing or joints will be permitted in either feeder or branch circuits except at outlet or accessible junction boxes.

B. Utilize compression type solderless connectors when making splices or taps in conductors No. 8 AWG or larger. Utilize pre-insulated connectors, 3M Company "Scotchlok" or Ideal Industries, Inc., "Super Nut" for splices and taps in conductors No. 10 AWG and smaller. Tape all splices and joints with Scotch #88 plastic tape to secure splices and provide insulation strength equal to that of the conductors joined.

C. Keep splices in underground junction boxes, handholes, and manholes to an absolute minimum. Where splices are necessary, use resin splicing kits manufactured by 3M Company to totally encapsulate the splice.

3.3 CONDUCTOR TERMINATION - Provide all power and control conductors that terminate on equipment or terminal strips with solderless lugs or T & B "Sta-Kon" terminals.

3.4 CONDUCTOR PHASE COLOR CODING

A. All service, feeder and branch circuit conductors on the project secondary electrical system shall be color coded as follows:

208/120 Volts	Phase
Black	A
Red	B
Blue	C
White	Neutral
Green	Ground

B. Where color coded conductors are not commercially available, colored non-aging, plastic tape may be utilized.

C. Phases in panelboards and similar equipment shall be connected Phase A, B, C from left to right, top to bottom, or front to back.

3.5 CONDUCTOR AMPACITIES

A. Unless both the equipment, panelboard and enclosures are marked otherwise, conductors shall be sized as follows: Conductors of No. 14 to No. 1 AWG shall be applied at their 60 degree C ampacities. Conductors No. 1/0 AWG and greater shall be applied at their 75 degree C ampacities.

B. Derating of conductors shall be in accordance with National Electrical Code "Notes to Tables 310-16 through 310-19." The maximum allowable load current shall be determined by the trip setting of the overcurrent protection.

3.6 HARMONICS -To allow for harmonic current, any shared neutral shall be at least one size greater than its respective phase conductors.

End of Section

SECTION 261300

ENCLOSURES

PART I - GENERAL

1.1 DESCRIPTION

A. This section describes general requirements, products and methods of execution relating to outlet, pull and junction boxes for use with wiring devices, light fixture outlets and general raceway installation approved for use on this project.

B. All boxes 150 cubic inches or smaller shall be sized per NEC Article 370.

C. Pull and junction boxes larger than 150 cubic inches shall conform to UL Standard 50-1970, Cabinets and Boxes

1.2 QUALITY ASSURANCE - UL listing for intended usage shall constitute proof of acceptable quality.

PART II - PRODUCTS

2.1 Cast Boxes with threaded hubs and gasketed covers shall be used in the following locations:

A. All exterior locations

B. All wet or damp locations

C. All surface mounted interior locations below 48" above floor

2.2 Galvanized Pressed Steel Boxes may be used wherever they are permitted by code, except in areas indicated in preceding paragraph.

2.3 Grounding Screw: All boxes shall have a drilled and tapped hole in the back of the box for a grounding screw.

2.4 Accessories: Box covers, extension rings, bases, hanger bars, etc., for use in connection with the installation, shall be approved for use in the various applications.

2.5 Pull and Junction Boxes shall conform to Article 370 of the NEC and the following requirements:

A. Sheet metal boxes shall be approved for use in all dry, interior, non-hazardous locations.

B. Boxes exposed to rain or installed in wet locations shall be NEMA 3R or 4, as noted.

C. Boxes installed underground shall be either precast concrete or cast iron.

PART III - EXECUTION

3.1 All boxes shall be securely fastened in position and supported independently of the conduit system.

3.2 Boxes shall be installed true to the building lines and at equal heights in conformity with mounting heights specified in other sections of the specification. Provide the best suitable box for each outlet requirement.

3.3 Boxes shall have only the holes necessary to accommodate the conduits at point of installation. All boxes shall have lugs or ears to secure covers.

3.4 All boxes shall be rigidly secured in position. All recessed boxes shall be so set that the front edge of the box shall be flush with the finished wall or ceiling line, or not more than 1/4" back of same.

3.5 All boxes shall be installed so that covers are readily accessible and adequate working clearance is maintained after completion of the installation.

End of Section

SECTION 263213
DIESEL-ENGINE-DRIVEN GENERATOR SETS

PART 1 - GENERAL

1.1 SUMMARY

A. Section Includes:

1. Diesel engine.
2. Diesel fuel-oil system.
3. Control and monitoring.
4. Generator overcurrent and fault protection.
5. Generator, exciter, and voltage regulator.
6. Outdoor engine generator enclosure (where selected).
7. Vibration isolation devices (where applicable).

B. Related Requirements:

1. Section 262313 "Paralleling Low-Voltage Switchgear" for controls and paralleling equipment for large or multiple parallel engine generators.
2. Section 263343 "Battery Chargers" for remote engine battery chargers.
3. Section 263600 "Transfer Switches" for transfer switches including sensors and relays to initiate automatic-starting and -stopping signals for engine generators.

1.2 DEFINITIONS

A. EPS: Emergency power supply.
B. EPSS: Emergency power supply system.
C. Operational Bandwidth: The total variation from the lowest to highest value of a parameter over the range of conditions indicated, expressed as a percentage of the nominal value of the parameter.

1.3 ACTION SUBMITTALS

A. Product Data: For each type of product.

1. Include rated capacities, operating characteristics, electrical characteristics, and furnished specialties and accessories.
2. Include thermal damage curve for generator.
3. Include time-current characteristic curves for generator protective device.
4. Include fuel consumption in gallons per hour (liters per hour) at 0.8 power factor at 0.5, 0.75, and 1.0 times generator capacity.
5. Include generator efficiency at 0.8 power factor at 0.5, 0.75, and 1.0 times generator capacity.
6. Include airflow requirements for cooling and combustion air in cubic feet per minute (cubic meters per minute) at 0.8 power factor, Provide Drawings indicating requirements and limitations for location of air intake and exhausts.
7. Include generator characteristics, including, but not limited to, kilowatt rating, efficiency, reactances, and short-circuit current capability.

B. Shop Drawings:

1. Dimensioned Outline Drawings of Equipment Unit: With engine and generator mounted on rails, identify center of gravity and total weight for provided components; fuel tank, enclosure, silencer, base tank, each piece of equipment not integral to the engine generator.
2. Include details of equipment assemblies. Indicate dimensions, weights, loads, required clearances, method of field assembly, components, and location and size of each field connection.
3. Identify fluid drain ports and clearance requirements for proper fluid drain.
4. Design calculations for selecting vibration isolators and seismic restraints and for designing vibration isolation bases.
5. Vibration Isolation Base Details: Detail fabrication including anchorages and attachments to structure and to supported equipment. Include base weights.
6. Include diagrams for power, signal, and control wiring. Complete schematic, wiring, and interconnection diagrams indicating terminal markings for engine generators and functional relationship between all electrical components.
7. Rigging Information: Indicate location of each lifting attachment, generator-set center of gravity, and total package weight in submittal drawings.

1.4 INFORMATIONAL SUBMITTALS

A. Seismic Qualification Data: Certificates, for engine generator, accessories, and components, from manufacturer.

1. Basis for Certification: Indicate whether withstand certification is based on actual test of assembled components or on calculation.
2. Detailed description of equipment anchorage devices on which the certification is based and their installation requirements.

B. Source Quality-Control Reports: Including, but not limited to, the following:

1. Certified summary of prototype-unit test report. Perform tests at rated load and power factor. Provide the following test results:

   a. Maximum Power Level
   b. Maximum Motor Starting (sKVA)
   c. Structural Soundness
   d. Torsional Analysis
   e. Transient Response
   f. Alternator Temperature Rise
   g. Engine Cooling Requirements (unit mounted radiator)
   h. Harmonic Analysis (per IEEE-115 and ANSI-100)
   i. Voltage Regulation
   j. Endurance Testing

2. Certified Test Reports: For components and accessories that are equivalent, but not identical, to those tested on prototype unit.
3. Report of factory test on units to be shipped for this Project, indicating evidence of compliance with specified requirements.
4. Report of sound generation.
5. Report of exhaust emissions indicating compliance with applicable regulations.
6. Certified Torsional Vibration Compatibility: Comply with NFPA 110.

C. Field quality-control reports. Field start up report and unit in-service documentation, including load bank test results if applicable.

1.5 CLOSEOUT SUBMITTALS

A. Operation and Maintenance Data: For packaged engine generators to include in emergency, operation, and maintenance manuals. Include manufacturer's recommended maintenance and periodic testing plan in accordance with NFPA 110, Chapter 8.

B. Furnish extra materials required by local Authority Having Jurisdiction (AHJ) and defined in project documents that match products installed and that are packaged with protective covering for storage and identified with labels describing contents.

1.6 QUALITY ASSURANCE

A. The generator set covered by these specifications shall be designed, tested, rated, assembled and installed in accordance with all applicable standards below:

1. CSA C22.2, No. 14-M91 Industrial Control Equipment.
2. CSA C22.2, No. 100 Motors and Generators
3. CSA 282-15
4. EN 61000-6
5. EN 55011
6. FCC Part 15 Subpart B
7. ISO 8528
8. IEC 61000
9. UL 508
10. UL 2200
11. UL 142
12. UL 6200
13. Designed to allow for installed compliance to NFPA 37, NFPA 70, NFPA 99 and NFPA 110

B. Manufacturer Qualifications:

1. Current certificate holder for ISO 9001 compliance.
2. The power system shall be produced by a manufacturer who has produced this type of equipment for a period of at least 25 years and who maintains a service organization of factory-authorized generator technicians available twenty-four hours a day throughout the year.
3. Manufacturing and assembly of products must be done in the United States using domestically sourced materials to the extent practical.

C. Installer Qualifications: An authorized representative who is trained and certified by the manufacturer on stationary power systems.

1.7 WARRANTY

A. Manufacturer's Warranty: Manufacturer agrees to repair or replace components of packaged engine generators and associated auxiliary components that fail in materials or workmanship within specified warranty period.

1. Warranty: 2 Year Comprehensive from date of Substantial Completion.

2. A Comprehensive Warranty is defined as the manufacturer covering replacement parts, labor, and limited technician travel costs for covered warranty repairs during the listed warranty period. A Limited warranty is defined as the manufacturer covering replacement parts, labor, and limited technician travel costs for the first 2 years and then replacement parts for the remainder of the listed warranty period.

PART 2 - PRODUCTS

2.1 MANUFACTURERS

A. Basis-of-Design Product: Subject to compliance with requirements, provide Generac Power Systems, Inc.; 275 kW, 10.3L with a K0300124Y21 - 300kW alternator. The Three Phase generator shall be rated for 275 kW at 208 volts and 60 Hz, at 0.8 power factor lagging while operating at a maximum ambient temperature of 110 Fahrenheit and maximum altitude of 5000 feet above sea level without reduction in electrical output capacity. Comparable products by one of the following will also be considered:

1. Caterpillar, Inc.
2. Cummins Power Generation.

B. Source Limitations: Obtain packaged engine generators and auxiliary components from single source from single manufacturer. "Source Limitations: Obtain packaged engine generators and auxiliary components from single supplier. The equipment supplied and installed shall meet the requirements of NEC and all applicable local codes and regulations. All equipment shall be new, of current production. There shall be one source responsibility for warranty; parts and service through a local representative with factory certified service personnel.

C. Requests for substitutions shall be made a minimum of ten (10) days prior to bid date. Manufacturers catalog data and a completed generator sizing model using the proposed manufacturer's generator sizing software shall accompany each request and authorized acceptance shall be addenda only. Should any substitutions be made, the contractor shall bear responsibility for the installation, coordination and operation of the system as well as any engineering and redesign costs, which may result from such substitutions.

2.2 PERFORMANCE REQUIREMENTS

A. Seismic – non-OSHPD: Provide materials, bracing, and mounting to ensure generator will withstand, and continue to operate, through a seismic event. Present seismic calculations and certificate for the specific model generator in accordance with the relevant IBC and ASCE standard. This will include drawings of the generator and mounting details. Seismic Performance: Engine generator housing, sub-base fuel tank, engine-generator assembly, batteries, battery racks, silencers, sound attenuating equipment, accessories, and components to withstand the effects of earthquake motions determined in accordance with ASCE/SEI 7 when required on the project

B. NFPA Compliance:

1. Comply with NFPA 37.
2. Comply with NFPA 70.
3. Comply with NFPA 99.
4. Comply with NFPA 110 requirements for Level 1 EPSS.

C. UL Compliance: Engine generator assembly and factory enclosure (if provided) shall be UL 2200 listed.

D. Engine Exhaust Emissions: Comply with applicable US EPA, State and Local Government requirements. Diesel Stationary Emergency: Engines shall be certified by the manufacturer to comply with 40 CFR Part 60 Subpart IIII.

2.3 ENGINE GENERATOR ASSEMBLY DESCRIPTION

A. Factory-assembled and -tested, water-cooled engine, with brushless generator and accessories.
B. Electrical Components, Devices, and Accessories: Listed and labeled as defined in NFPA 70, by a qualified testing agency, and marked for intended location and use.
C. Power Rating: Standby.
D. Service Load: The generator set shall be a Generac model 275 kW, 10.3L with a K0300124Y21 - 300kW alternator. It shall provide 275 kW and 343.75 kVA while operating at the maximum ambient operating temperature and elevation specified in the project documents.
E. Power Factor: 0.8 lagging.
F. Frequency: 60 Hz.
G. Voltage: 208 Volts ac.
H. Phase: Three Phase, Four Wire.
I. Induction Method: Turbocharged.
J. Governor: Adjustable isochronous, with speed sensing.
K. Mounting Frame: Structural steel framework to maintain alignment of mounted components without depending on concrete foundation. Provide lifting attachments sized and spaced to prevent deflection of base during lifting and moving.
L. Nameplates: For each major system component to identify manufacturer's name, model and serial number of component.

M. Engine Generator Performance:

1. Steady-State Voltage Operational Bandwidth: 3 percent of rated output voltage from no load to full load.
2. Transient Voltage Performance: Not more than 5.83 percent variation for 50 percent step-load increase or decrease at unity power factor. Voltage shall recover and remain within the steady-state operating band within three seconds.
3. Steady-State Frequency Operational Bandwidth: 0.5 percent of rated frequency from no load to full load.
4. Steady-State Frequency Stability: When system is operating at any constant load within the rated load, there shall be no random speed variations outside the steady-state operational band and no hunting or surging of speed.
5. Transient Frequency Performance: Less than 2.0 Hertz variation for 50 percent step-load increase or decrease at unity power factor. Frequency shall recover and remain within the steady-state operating band within five seconds.
6. Output Waveform: At no load, harmonic content measured line to line or line to neutral shall not exceed 5 percent total and 3 percent for single harmonics. Telephone influence factor, determined in accordance with NEMA MG 1, shall not exceed 50 percent.
7. Sustained Short-Circuit Current: For a three-phase, bolted short circuit at system output terminals, system shall supply a minimum of 300 percent of rated full-load current for not less than 10 seconds and then clear the fault automatically, without damage to generator system components.
8. Start time to comply with NFPA system requirements.

2.4 ENGINE PERFORMANCE

A. Fuel: ASTM D975, diesel fuel oil, Grade 2-D S15. Engine shall be capable of operating on hydrotreated vegetable oil blends (up to HVO 100) conforming to the EN 15940 specification without modification.

B. Rated Engine Speed: 1800 rpm.
C. Lubrication System to be engine mounted.

1. Oil filter shall be engine-mounted replaceable cartridge type with integral bypass valve, in accordance with manufacturer recommendations.
2. Thermostatic Control Valve: Control flow in system to maintain optimum oil temperature. Unit shall be capable of full flow and is designed to be fail-safe.
3. Crankcase Drain: Arranged for complete gravity drainage to an easily removable container with no disassembly and without use of pumps, siphons, special tools, or appliances.

D. Jacket Coolant Heater: Jacket water heater shall be sized per NFPA110 and UL listed to ensure that genset will start within the specified time period and ambient conditions.
E. Integral Cooling System: Closed loop, liquid cooled, with radiator factory mounted on engine generator set mounting frame and integral engine-driven coolant pump.

1. Coolant: Solution of 50 percent ethylene-glycol-based antifreeze and 50 percent water, with anticorrosion additives as recommended by engine manufacturer.
2. Expansion Tank: Constructed of welded steel plate and rated to withstand maximum closed-loop coolant system pressure for engine used. Equip with gauge glass and petcock.
3. Temperature Control: Self-contained, thermostatic-control valve modulates coolant flow automatically to maintain optimum constant coolant temperature as recommended by engine manufacturer.
4. Maximum Ambient Operating Temperature on Radiator: 122 degrees F (50 degrees C).
5. Coolant Hose: Flexible assembly with inside surface of nonporous rubber and outer covering of aging-, UV-, and abrasion-resistant fabric.

a. Rating: 50-psig (345-kPa) maximum working pressure with coolant at 180 deg F (82 deg C), and noncollapsible under vacuum.
b. Meets SAE 100R1A Type S, EN853 1SN, ISO 1436-1 Type 1SN
c. a Fittings: Flanges or steel pipe nipples with clamps to suit piping and equipment connections.

F. Muffler/Silencer:

1. Critical type, sized as recommended by engine manufacturer and selected with exhaust piping system to not exceed engine manufacturer's engine backpressure requirements.

G. Air-Intake Filter: Heavy duty, engine-mounted air cleaner with replaceable dry-filter element and "blocked filter" indicator.
H. Starting System: 12 or 24-V electric, with negative ground.
1. Cranking Cycle: As required by NFPA 110 for system level specified.
2. Battery: Lead acid, with capacity within ambient temperature range specified in "Performance Requirements" Article to provide specified cranking cycle as required by NFPA 110 for system level specified.
3. Battery-Charging Alternator: Factory mounted on engine with solid-state voltage regulation and 35 minimum continuous rating.
4. Battery Charger: Current-limiting, automatic-equalizing, and float-charging type designed for lead-acid batteries. Unit shall comply with UL 1236 and NFPA 110 Section 5.6.4.6 for Level 1 systems.:

2.5 FUEL SYSTEM – DIESEL

A. Comply with NFPA 37.

B. Piping: Fuel-oil piping shall be Schedule 40 black steel, complying with requirements in Section 231113 "Facility Fuel-Oil Piping." Cast iron, aluminum, copper, and galvanized steel shall not be used in the fuel-oil system.
C. Main Fuel Pump: Mounted on engine to provide primary fuel flow under starting and load conditions.
D. Fuel Filtering: Remove water and contaminants larger than 2 microns.
E. Relief-Bypass Valve: Automatically regulates pressure in fuel line and returns excess fuel to source.
F. Subbase-Mounted, Double-Wall, Fuel-Oil Tank: Factory installed and piped, complying with UL 142 fuel-oil tank. Features include the following:

1. Tank level indicator.
2. Fuel-Tank Capacity: Sized for 48 running hours at 100% of rated generator load between fuel refills.
3. Leak detection in interstitial space.
4. Vandal-resistant fill cap.
5. Containment Provisions: Comply with requirements of authorities having jurisdiction. Secondary containment basin, sized at a minimum of 110% of the tank capacity to prevent escape of fuel into the environment in the event of a primary tank rupture.
6. Normal and emergency vents on the main tank and secondary containment space, sized according to UL 142.

2.6 CONTROL AND MONITORING

A. Automatic Starting System Sequence of Operation: When mode-selector switch on the control and monitoring panel is in the automatic position, remote-control contacts in one or more separate automatic transfer switches initiate starting and stopping of engine generator. When mode-selector switch is switched to the on position, engine generator starts. The off position of same switch initiates engine generator shutdown. When engine generator is running, specified system or equipment failures or derangements automatically shut down engine generator and initiate alarms.
B. Manual Starting System Sequence of Operation: Switching on-off switch on the generator control panel to the on position starts engine generator. The off position of same switch initiates engine generator shutdown. When engine generator is running, specified system or equipment failures or derangements automatically shut down engine generator and initiate alarms.
C. Provide minimum run time control set for 15 minutes with override only by operation of a remote emergency-stop switch.
D. Control panel must comply with UL 6200. The controller shall meet ASTM B117 (salt spray test).
E. Remote Connectivity: Controller shall be capable of remote connectivity via RS485. Remote connectivity shall be provided by a physically separate module that can be secured, access limited, and/or physically removed to restrict and/or completely isolate the generator system from any outside control or monitoring.
F. Connection to Building Management: Provide connections for data transmission of indications to remote data terminals via Modbus.
G. Environmentally Hardened Design: Open circuit boards, edge cards, and PC ribbon cable connections are unacceptable.
H. PCB Construction: Circuit boards with surface-mounted components to provide vibration durability. Circuit boards utilizing large capacitors or heat sinks must utilize encapsulation methods to securely support these components.
I. Configuration:

1. Operating and safety indications, protective devices, basic system controls, and engine gauges shall be grouped in a common control and monitoring panel mounted on the engine generator. Mounting method shall isolate the control panel from engine generator vibration. Panel powered from the engine generator battery.

J. Control and Monitoring Panel:

1. Digital engine generator controller with integrated touch screen, controls, and microprocessor, capable of local and remote control, monitoring, and programming, with battery backup.
2. Instruments: Located on the control and monitoring panel and viewable during operation.

    a. Engine lubricating-oil pressure gauge.
    b. Engine-coolant temperature gauge.
    c. DC voltmeter (alternator battery charging).
    d. Running-time meter.
    e. AC voltmeter, for each phase.
    f. AC ammeter, for each phase.
    g. AC frequency meter.
    h. Generator-voltage adjusting feature.

3. Controls and Protective Devices: Controls, shutdown devices, and common alarm indication, including the following:

    a. Cranking control equipment.
    b. Run-Off-Auto switch.
    c. Control switch not in automatic position alarm.
    d. Overcrank alarm.
    e. Overcrank shutdown device.
    f. Low-water temperature alarm.
    g. High engine temperature pre-alarm.
    h. High engine temperature.
    i. High engine temperature shutdown device.
    j. Overspeed alarm.
    k. Overspeed shutdown device.
    l. Low fuel main tank.

        1) Low-fuel-level alarm shall be initiated when the level falls below that required for operation for duration required for the indicated EPSS class.

    m. Coolant low-level alarm.
    n. Coolant low-level shutdown device.
    o. Coolant high-temperature prealarm.
    p. Coolant high-temperature alarm.
    q. Coolant low-temperature alarm.
    r. Coolant high-temperature shutdown device.
    s. EPS load indicator.
    t. Battery high-voltage alarm.
    u. Low cranking voltage alarm.
    v. Battery-charger malfunction alarm.
    w. Battery low-voltage alarm.
    x. Lamp test.
    y. Contacts for local and remote common alarm.
    z. Remote manual stop shutdown device.
    aa. Total engine run hours, non-resettable.
    bb. Engine generator metering, including voltage, current, hertz, kilowatt, kilovolt ampere, and power factor.

K. Engine Generator Metering: Comply with [Section 260913 "Electrical Power Monitoring and Control."] [Section 262713 "Electricity Metering."] [Section 260913 "Electrical Power Monitoring and Control" and Section 262713 "Electricity Metering."]

L. External Alarm & Status Relays: Provide a separate terminal block, factory wired to Form C dry contacts, for each alarm and status condition required by Building Management or other external systems as shown on electrical drawings.

M. Common Remote Panel with Common Audible Alarm: Include necessary contacts and terminals in control and monitoring panel. Remote panel shall be powered from the engine generator battery.

N. Remote Alarm Annunciator: An LED indicator light labeled with proper alarm conditions shall identify each alarm event, and a common audible signal shall sound for each alarm condition. Silencing switch in face of panel shall silence signal without altering visual indication. Connect so that after an alarm is silenced, clearing of initiating condition will reactivate alarm until silencing switch is reset. Cabinet and faceplate are surface- or flush-mounting type to suit mounting conditions indicated.

1. Overcrank alarm.
2. Low water-temperature alarm.
3. High engine temperature pre-alarm.
4. High engine temperature alarm.
5. Low lube oil pressure alarm.
6. Overspeed alarm.
7. Low fuel main tank alarm.
8. Low coolant level alarm.
9. Low cranking voltage alarm.
10. Contacts for local and remote common alarm.
11. Audible-alarm silencing switch.
12. Air shutdown damper when used.
13. Run-Off-Auto switch.
14. Control switch not in automatic position alarm.
15. Fuel tank derangement alarm.
16. Fuel tank high-level shutdown of fuel supply alarm.
17. Lamp test.
18. Low-cranking voltage alarm.
19. Generator overcurrent-protective-device not-closed alarm.

O. Remote Emergency-Stop Switch: Provide remote emergency stop switch in quantity and style as shown on electrical drawings. Electrical contractor to coordinate exact location with engineer and local AHJ.

P. Engine Run Relay: The generator set shall be provided with a run relay which shall provide a double-pole, double-throw relay with 10-amp/ 250 VAC contacts to indicate that the generator is running. The run relay dry contacts can be used for energizing or de-energizing customer devices while the generator is running (e.g. louvers, indicator lamps, etc.)

Q. Data Logging:

1. Event Logging – the controller keeps a record of up to 8,000 events with date and time locally for warning and shutdown faults. This event log can be downloaded onto a USB storage device or onto a PC through the service program.
2. Event Snapshot – the control system shall capture 15 seconds of critical data around the time a fault or warning. This data shall be viewable on the controller and downloadable.
3. Data Logging – the controller shall allow customized parameters to be logged based on a start trigger from the controller interface.

   a. The parameters are selectable from all monitored parameters.
   b. The sample period shall be configurable from 1 second to 1 day.
   c. The collected data shall be stored on a USB storage device plugged into the control panel.

2.7 GENERATOR OVERCURRENT AND FAULT PROTECTION

A. Overcurrent protective devices shall be coordinated to optimize selective tripping when a short circuit occurs.

1. Overcurrent protective devices for the entire EPSS shall be coordinated to optimize selective tripping when a short circuit occurs. Coordination of protective devices shall consider both utility and EPSS as the voltage source.
2. Overcurrent protective devices for the EPSS shall be accessible only to authorized personnel.

B. Generator Overcurrent Protective Device:

1. Unit mounted circuit breakers. Rating, ampacity, accessories, as shown on drawings or as listed below:
2. Molded-case circuit breaker, electronic-trip type; 100 percent rated; complying with UL 489:

   a. Tripping Characteristics: Adjustable long-time and short-time delay and instantaneous.
   b. Trip Settings: Selected to coordinate with generator thermal damage curve.
   c. Shunt Trip: Connected to trip breaker when engine generator is shut down by other protective devices.
   d. Mounting: Adjacent to, or integrated with, control and monitoring panel.

C. Generator Controller Integrated Alternator Protective Functions:

1. Short-time I^2t function : Generator controller-based function shall continuously monitor current level in each phase of alternator output, integrate alternator heating effect over time, and predict when thermal damage of alternator will occur. As overcurrent heating effect on the alternator approaches the thermal damage point of the unit, protector switches the excitation system off, opens the generator disconnect device, and shuts down the engine generator. When signaled by generator protector or other engine generator protective devices, a shunt-trip device in the generator disconnect switch shall open the switch to disconnect the generator from load circuits.
2. Long-time function: Initiates a generator overload alarm when generator has operated at an overload equivalent to 110 percent of full-rated load for 60 seconds. Indication for this alarm is integrated with other engine generator malfunction alarms. Contacts shall be available for load shed functions.
3. Short-circuit fault clearing: Under single- or three-phase fault conditions, regulates generator to 300 percent of rated full-load current for up to 10 seconds.
4. Senses clearing of a fault by other overcurrent devices and controls recovery of rated voltage to avoid overshoot.

2.8 GENERATOR, EXCITER, AND VOLTAGE REGULATOR

A. Comply with NEMA MG 1.
B. Drive: Generator shaft shall be directly connected to engine shaft. Exciter shall be rotated integrally with generator rotor.
C. Electrical Insulation: Class H.
D. Stator-Winding Leads: Brought out to terminal box to permit future reconnection for other voltages if required.
E. Range: Provide range of output voltage by adjusting the excitation level.

F. Construction shall prevent mechanical, electrical, and thermal damage due to vibration, overspeed up to 125 percent of rating, and heat during operation at 110 percent of rated capacity. Stator shall be skewed construction to minimize harmonic voltage distortion.
G. Enclosure: Drip proof.
H. Instrument Transformers: Mounted within generator enclosure.
I. Voltage Regulator:

1. Voltage Regulator: Solid-state type, separate from exciter. The digital voltage regulator shall be microprocessor based with fully programmable operating and protection characteristics. The regulator shall maintain steady-state generator output voltage within +/- 0.25% for any constant load between no load and full load. The regulator shall be capable of sensing true RMS. The regulator shall provide an adjustable Volts/Hz slope regulation characteristic in order to optimize voltage and frequency response for site conditions.
2. Alternator Excitation: Permanent Magnet Generator (PMG) shall provide excitation power for optimum motor starting and short circuit performance.
3. The generator must accept rated load in one-step.
4. Calculated Transient Voltage Performance: Motor starting performance and voltage dip determinations shall be based on the complete generator assembly. Voltage dip shall not exceed 2.6 percent based on the largest project block load, as determined by manufacturer's sizing program.
5. System Transient Voltage Performance: Alternator shall be capable of supplying 661 sKVA with a voltage dip not more than 35% at 0.3 starting power factor. Sustained voltage dip data or manufacturer-published SKVA numbers based on unity PF alternator-only dynamometer testing will not be accepted.
6. Calculated Transient Frequency Performance: Transient frequency dip performance shall be based on the complete generator set. Maintain frequency within 0.8 percent based on largest project block load, as determined by manufacturer's sizing program.

J. Strip Heater: Thermostatically controlled unit arranged to maintain stator windings above dew point. The strip heater shall be wired directly to the incoming power distribution panel or load center.
K. Windings: Two-thirds pitch stator winding and fully linked amortisseur winding.

2.9 OUTDOOR ENGINE GENERATOR ENCLOSURE

A. Basis of design is a Sound Level 2.
B. Generator packaged within manufacturer's weather protective, sound attenuated enclosure. Enclosure and generator set shall be UL 2200 Listed as a system.
C. Enclosure Construction: Minimum 14 gauge construction. Roof construction shall be raised-seam, gasket-free interlocking panels. Rivets shall not be used on external painted surfaces. Design shall be rodent resistant.
D. Doors shall be equipped with lift-off pin and sleeve type hinges to allow access to the engine, alternator, and control panel. Hinges shall be adjustable for door alignment. Hinges and all exposed fasteners shall be stainless steel. Each door shall be equipped with minimum 2-point latching mechanism and identical keys. Perimeter of all door openings shall include polyethylene gasket.
E. Upward discharging exhaust hood for engine cooling airflow and exhaust.
F. Engine exhaust silencer mounted within enclosure discharge hood.
G. Enclosure Finish: Electrostatic applied powered paint, baked and finished to manufacturer's specifications. Finish system shall be subjected to the following tests:

1. ASTM D1186 - 87; 2.5+ mil Paint Thickness
2. ASTM D3363 - 92a; Material Hardness
3. ASTM D522 - B; Resistance to Cracking

4. ASTM D3359 - B; Adhesion
5. ASTM B117 D 1654; Resistant to Salt Water Corrosion
6. ASTM D1735 D 1654; Resistant to Humidity
7. ASTM 2794 93 (2004); Impact Resistance
8. SAE J1690 - UV Protection"

H. Enclosure Color: Manufacturer's standard color, or custom color matched based on architect's design with color sample provided to generator manufacturer.
I. Wind Rating: Enclosure shall be constructed to attain basic wind speed rating of 110 MPH; WIF 1.15, Exposure Category "C", Building Classification "Enclosed", Topographic Factor Kzt = 1. Wind Design Pressures: windward, 20.6 lb/ft^2; leeward, -12.9 lb/ft^2; roof, -18.0 lb/ft^2."
J. Snow Load Rating: Minimum 70 pounds per square foot.
K. Engine-Cooling Airflow through Enclosure: Maintain temperature rise of system components within required limits when unit operates at 110 percent of rated load for two hours with ambient temperature at top of range specified in system service conditions.
L. Sound Insulation: Enclosure and air discharge hood completely lined with reflective silver mylar faced sound attenuating closed cell foam that meets UL 94 HF1 standards for flammability (FMVSS 302 test method). Roof sound insulation panels shall include additional mechanical retention.
M. Sound Performance: The engine generator, while operating at full rated load, shall not exceed 75.20 dBA average measured at 23 ft (7 meters) from the engine generator in a free field environment.
N. Louvers: Fixed-engine, cooling-air inlet and discharge. Stormproof and drainable louvers prevent entry of rain and snow.
O. Distribution Panel for Accessory Loads: Accessory Load Panel: Provide an internal, factory mounted and wired, electrical distribution panel to serve accessory loads; including:

1. Engine block heater
2. Battery charger
3. Battery warmer (if included)
4. Enclosure lights (if included)
5. Enclosure heater (if included)
6. Accessory outlets
7. Motorized louvers (if included)
8. Other accessories (if included)

P. Convenience Outlet: Factory-wired convenience 120v duplex-outlet within enclosure, GFCI.
Q. Enclosure Heater: Provide thermostatically controlled space heater factory installed within enclosure designed to maintain minimum internal temperature at 40 deg F (4 deg C).

2.10 VIBRATION ISOLATION DEVICES

A. Elastomeric Isolator Pads: Oil- and water-resistant elastomer or natural rubber, arranged in single or multiple layers, molded with a nonslip pattern and galvanized-steel baseplates of sufficient stiffness for uniform loading over pad area, and factory cut to sizes that match requirements of supported equipment for units with a ratings 750kw or below.

1. Material: Standard neoprene separated by steel shims.

B. Spring Isolators: Freestanding, steel, open-spring isolators with seismic restraint for units with a rating larger than 750kw.

1. Housing: Steel with resilient vertical-limit stops to prevent spring extension due to wind loads or if weight is removed; factory-drilled baseplate bonded to 1/4-inch- (6-mm-) thick, elastomeric isolator pad attached to baseplate underside; and adjustable equipment-mounting and -leveling bolt that acts as blocking during installation.
2. Outside Spring Diameter: Not less than 80 percent of compressed height of the spring at rated load.
3. Minimum Additional Travel: 50 percent of required deflection at rated load.
4. Lateral Stiffness: More than 80 percent of rated vertical stiffness.
5. Overload Capacity: Support 200 percent of rated load, fully compressed, without deformation or failure.
6. Minimum Deflection: 0.5.

C. Vibration isolation devices shall not be used to accommodate misalignments or to make bends.

2.11 SOURCE QUALITY CONTROL

A. Prototype Testing: Factory test engine generator using same engine model, constructed of identical or equivalent components and equipped with identical or equivalent accessories.

1. Tests: Comply with IEEE 115 and with NFPA 110, Level 1 Energy Converters.

B. Project-Specific Equipment Tests: Before shipment, factory test engine generator and other system components and accessories manufactured specifically for this Project. Perform tests at rated load and power factor. Include the following tests:

1. Test components and accessories furnished with installed unit that are not identical to those on tested prototype to demonstrate compatibility and reliability.
2. Test generator, exciter, and voltage regulator as a unit.
3. Full load run.
4. Maximum power.
5. Voltage regulation.
6. Transient and steady-state governing.
7. Single-step load pickup.
8. Safety shutdowns.
9. Report factory test results within 10 days of completion of test.

2.12 FINISHES

A. Indoor and Outdoor Enclosures and Components: Manufacturer's standard finish over corrosion-resistant pretreatment and compatible primer.

PART 3 - EXECUTION

3.1 EXAMINATION

A. Examine areas, equipment bases, and conditions, with Installer present, for compliance with requirements for installation and other conditions affecting packaged engine generator performance.
B. Examine roughing-in for piping systems and electrical connections. Verify actual locations of connections before packaged engine generator installation.
C. Proceed with installation only after unsatisfactory conditions have been corrected.

3.2 PREPARATION

A. Interruption of Existing Electrical Service: Do not interrupt electrical service to facilities occupied by Owner or others unless permitted under the following conditions and then only after arranging to provide temporary electrical service in accordance with requirements indicated:

1. Notify Project Manager in advance of proposed interruption of electrical service.
2. Do not proceed with interruption of electrical service without written permission.

3.3 INSTALLATION

A. Comply with NECA 1 and NECA 404.
B. Comply with packaged engine generator manufacturers' written installation and alignment instructions and with NFPA 110.
C. Equipment Mounting:

1. Install packaged engine generators on cast-in-place concrete equipment bases or steel dunnage as indicated on drawings.
2. Coordinate size and location of mounting bases for packaged engine generators.
3. Install unit with vibration isolation devices described in section 2.11.

3.4 FIELD QUALITY CONTROL

A. Tests and Inspections: The supplier of the electric generating plant and associated items covered herein shall provide factory certified technicians to inspect the completed installation and to perform an initial startup inspection to include:

1. Ensuring the engine starts (both hot and cold) within the specified time.
2. Verification of engine parameters within specification.
3. Verify no load frequency and voltage, adjusting if required.
4. Test all automatic shutdowns of the engine-generator.
5. Perform a load test of the electric plant, ensuring full load frequency and voltage are within specification by using building load.

B. NFPA 110 Acceptance Tests: Perform tests required by NFPA 110 that are additional to those specified here, including, but not limited to, single-step full-load pickup test.
C. Battery and Charger Tests:

1. Measure charging voltage and voltages between available battery terminals for full-charging and float-charging conditions.
2. Verify that measurements are within manufacturer's specifications."

D. System Integrity Tests: Verify proper installation, connection, and integrity of each element of engine generator system before and during system operation. Check for air, exhaust, and fluid leaks.
E. Coordinate tests with tests for transfer switches and run them concurrently.
F. Operational Test: After electrical circuitry has been energized, start units to confirm proper motor rotation and unit operation for generator and associated equipment.
G. Test and adjust controls and safeties. Replace damaged and malfunctioning controls and equipment.
H. Remove and replace malfunctioning units and retest and reinspect as specified above.
I. Retest: Correct deficiencies identified by tests and observations, and retest until specified requirements are met.

J. Report results of tests and inspections in writing. Record adjustable relay settings and measured insulation resistances, time delays, and other values and observations.

3.5 DEMONSTRATION

A. Engage a factory-authorized service representative to train Owner's maintenance personnel to adjust, operate, and maintain packaged engine generators.

3.6 MAINTENANCE SERVICE

A. Repair Service Capabilities:

1. The generator set supplier shall maintain service parts inventory for the entire power system at a central location which is accessible to the service location 24 hours per day, 365 days per year. The manufacturer of the generator set shall maintain a central parts inventory to support the supplier, covering all the major components of the power system, including: engines, alternators, control systems, paralleling electronics, and power transfer equipment.
2. The generator set shall be serviced by a local service organization that is trained and factory certified in generator set service. The supplier shall maintain an inventory of power system replacement parts in the local service location. Service vehicles shall be stocked with critical replacement parts. The service organization shall be on call 24 hours per day, 365 days per year. The service organization shall be physically located within 50 miles of the site.
3. The manufacturer shall maintain model and serial number records of each generator set provided for at least 20 years.

B. Preventative Maintenance Service Agreement: The supplier shall include as a line item adder in the proposal, a one-year maintenance service agreement. The maintenance shall be performed by factory authorized service technicians capable of servicing both the engine generator set(s) and the transfer switch(es). This agreement shall include semi-annual preventative maintenance visits to verify operation and/or complete the following:

1. All periodic engine maintenance as recommended by the service manual.
2. All electrical controls maintenance and calibrations as recommended by the manufacturer.
3. All auxiliary equipment as a part of the emergency systems.
4. The supplier shall guarantee emergency service.
5. All expendable maintenance items are to be included in this agreement.
6. A copy of this agreement and a schedule shall be provided in the submittal documents, detailing scope of work and preventative maintenance service visit interval.

END OF SECTION 263213

SECTION 26 3623

AUTOMATIC TRANSFER SWITCH

PART 1 GENERAL

1.01 Scope

Furnish and install automatic transfer switch(es) with number of poles, amperage, voltage, and withstand current ratings as shown on the plans. Basis of design is a Generac TX Series Service Entrance Rated Automatic Transfer Switch, Open - Delayed/Programmed Transfer (3 position), 1000 A, 3 Pole 4 Wire 208V, Transfer Switch in a NEMA 3R Enclosure. Each automatic transfer shall consist of a mechanically held power transfer switch unit and a microprocessor controller, interconnected to provide complete automatic operation. All transfer switches and control panels shall be the product of the same manufacturer.

1.02 Acceptable Manufacturers

Automatic transfer switches shall be Generac TX Series. Any alternative shall be submitted to the consulting engineer in writing at least 10 days prior to bid. Each alternate bid must list any deviations from this specification.

1.03 Codes and Standards

The automatic transfer switches and accessories shall conform to the requirements of:

A. UL 1008 - Standard for Automatic Transfer Switches
B. NFPA 70 - National Electrical Code (2017 version and later for start circuit monitoring)
C. NEC Articles 700, 701, 702, 708
D. NFPA 99 – Health Care Facilities
E. NFPA 110 – Emergency and Standby Power Systems
F. IEEE Standard 446 – IEEE Recommended Practice for Emergency and Standby Power Systems for Commercial and Industrial Applications
G. NEMA Standards ICS10, MG1, MG250, ICS6, AB1
H. ANSI C62.41
I. International Standards Organization: ISO 8528, 9001.
J. Where seismic rating and/or certification is required: IBC 2018, OSHPD

PART 2 PRODUCTS

2.01 Mechanically Held Transfer Switch

A. The basis of design is the Generac TX Series Transfer switch that utilities a knife blade mechanically latching design with maintenance free contacts. The transfer switch unit shall be electrically operated and mechanically held. The open transition switch shall be mechanically interlocked to ensure only one of two possible positions, normal or emergency. The delayed transition switch shall be mechanically interlocked to ensure one of three possible positions, normal and emergency.

B. The switch shall be positively locked and unaffected by momentary outages so that contact pressure is maintained at a constant value and temperature rise at the contacts is minimized for maximum reliability and operating life.

C. All main contacts shall be silver composition. Switches shall have segmented blow-on construction for high withstand current capability and be protected by separate arcing contacts.

D. A manual operating handle shall be provided for maintenance purposes.

E. Designs utilizing components of or parts thereof which are not intended for continuous duty, repetitive switching, or transfer between two active power sources are not acceptable.

F. Where neutral conductors must be switched, the ATS shall be provided with fully rated neutral transfer contacts.

G. Where neutral conductors are to be solidly connected, a neutral terminal plate with fully rated AL-CU pressure connectors shall be provided.

H. The switch shall be capable of the following methods of transfer: Open with In-Phase transition only, Time Delay in Neutral transition, or In-Phase transition with a default to Time Delay in Neutral.

I. The transfer switch shall have a Seismic Certification to the requirements of the international Building Code of electrical equipment.

2.02 ATS Control with Integrated User Interface Panel

A. The basis of design is the Generac TXC-100 Controller with Integrated User Interface Panel which is voltage agnostic for service purposes removing the need for technicians to carry and support control panels for every available voltage. Any manufacturers that provide a controller or control panel that does not meet this requirement should notify the consulting engineer before bidding.

B. The controller shall be connected to the transfer switch by an interconnecting wiring harness. The harness shall include a keyed disconnect plug to enable the controller to be disconnected from the transfer switch for routine maintenance.

C. The controller shall direct the operation of the transfer switch. The controller's sensing and logic shall be controlled by a built-in microprocessor for maximum reliability, minimum maintenance, and include standard on-board serial communications capability.

D. A user accessible USB port shall be provided to facilitate firmware updates, uploading of switch operational parameters, downloading of event history and switch operational statistics. This USB port shall be front accessible without opening the ATS door.

E. The controller shall provide single and three phase capability for maximum application flexibility and minimal spare part requirements. Voltage sensing shall be true RMS type and shall be accurate to ± 1% of nominal voltage. Frequency sensing shall be accurate to ± 0.1Hz. Time delay settings shall be accurate to ±0.5% of the full-scale value of the time delay. The panel shall be capable of operating over a temperature range of -20 to + 70 degrees C.

F. The controller power supply shall be field-configurable to operate on 120V through 480V systems without the need for transformers.

G. Control logic shall be backed up with a rechargeable, user-replaceable lithium-ion battery that shall also maintain control power for up to 60 minutes in the event no source power is available.

H. The controller shall be enclosed with a protective cover and be mounted separately from the transfer switch unit for safety and ease of maintenance.

I. The controller shall meet or exceed the requirements for Electromagnetic Compatibility (EMC) as follows:
1. IEC 61000 – 4 – 3 Radiated RF Field Immunity
2. IEC 61000 – 4 – 4 Electrical Fast Transient/Burst Immunity
3. IEC 61000 – 4 – 5 Surge Immunity
4. IEC 61000 – 4 – 6 Conducted RF Immunity
5. IEC 61000 – 4 -11 Voltage Dips and Interruptions
6. EN 61000 – 6 - 2 Industrial Immunity Requirements EN 61000-6-4 - Radiated Emissions
7. EN 61000 – 6 - 4 Conducted Emissions
8. CISPR 11 – Conducted RF Emissions and Radiated RF Emissions

2.03 Enclosure

The basis of design is a Generac TX Series Service Entrance Rated Transfer Switch in a NEMA 3R enclosure, with dimensions no larger than 89.8 Inches in Height, 38 Inches in Width, and 24.5 Inches In Depth. Larger enclosures than the basis of design will need to be approved by the Consulting Engineer to ensure there is enough wall space and appropriate clearance.

A. Provide a temperature and humidity controlled anti-condensation heater for all NEMA 3R and 4X enclosed units. Heater shall be an available option on NEMA 1 enclosures, when called for on plans. Heater cover to indicate a hot surface.

B. The switch mechanism and controller shall be easily removable from the enclosure in the field. This requirement will facilitate easy single-person installation on wall mounted switches, conduit fitting, and cable pulling while minimizing risk of damage and/or contamination of ATS components during the installation process.

C. Controller human interface and USB port shall be visible and operational through the enclosure door, without the need for personal protective equipment, avoiding arc-flash hazard for routine checks of the controller status.

PART 3 OPERATIONS

3.01 Controller Display and Keypad

A. A backlit four-line graphical LCD display and human interface shall be an integral part of the controller for viewing all available data and setting desired operational parameters. Operational parameters shall also be available for viewing and limited control through the RS-485 communications port.

B. All instructions and controller settings shall be easily accessible, readable, and accomplished without the use of codes, calculations, or instruction manuals.

C. The user interface shall be provided with test/reset modes. The test mode will simulate a normal source failure. The reset mode shall bypass the time delays on either transfer to emergency or retransfer to normal.

D. The following parameters shall only be adjustable only by authorized service personnel:

1. Nominal line voltage and frequency
2. Single or three phase sensing on normal
3. Transfer operating mode configuration, (open transition, or delayed transition)

3.02 Voltage and Frequency Sensing

A. Voltage and frequency on both the normal and emergency sources (as noted below) shall be continuously monitored, with the following pickup, dropout, and trip settings capabilities; values shown as percentage of nominal unless otherwise specified.

Voltage and Frequency Settings	**Range**	**Default Value**
Source 1 (Normal) is Genset	Yes or No	No
Source 1 Undervoltage Dropout	50-97%	85%
Source 1 Undervoltage Pickup	52-99%	90%
Source 1 Overvoltage Dropout	105-120%	110%
Source 1 Overvoltage Pickup	103-118%	105%
Source 1 Underfrequency Dropout	90-97%	90%
Source 1 Underfrequency Pickup	91-99%	95%
Source 1 Overfrequency Dropout	103-110%	105%
Source 1 Overfrequency Pickup	101-109%	102%
Source 1 Voltage Imbalance Drop	5-20%	5%
Source 1 Voltage Imbalance Pickup	3-18%	3%
Source 1 Warmup Time	0-1800s	3s
Source 1 Cooldown Time	0-1800s	1800s
Source 1 Minimum Run Time	300-1800s	1200s
Source 2 is Generator	Yes or No	Yes
Source 2 Undervoltage Dropout	50-97%	85%
Source 2 Undervoltage Pickup	52-99%	90%
Source 2 Overvoltage Dropout	105-120%	110%
Source 2 Overvoltage Pickup	103-118%	105%
Source 2 Underfrequency Dropout	90-97%	90%
Source 2 Underfrequency Pickup	91-99%	99%
Source 2 Overfrequency Dropout	103-110%	105%
Source 2 Overfrequency Pickup	101-109%	102%
Source 2 Voltage Imbalance Drop	5-20%	5%

Source 2 Voltage Imbalance Pickup	3-18%	3%
Source 2 Minimum Run Time	300-1800s	1200s
Source 2 Warmup Time	0-1800s	3s
Source 2 Cooldown Time	0-1800s	1800s
Phase Rotation Check	ABC, CBA, OFF	ABC
Supply Overvoltage	350 VAC	Fixed
Manual Return to Normal	Yes or No	
Time Delay Settings		
Transfer to Emergency	120s max	30s
Re-transfer to Normal	1,800s max	1,800s
Time Delay Neutral	120s max	30s
Engine Cool Down	300-1,800s	1,800s
Delayed Transition Time	120s max	120s
Elevator Signal	120s max	30s
In Phase Transfer	Yes or No	
In Phase Synchronization	Time 60-3600s	300s
Preferred Source	S1, S2	S1
Voltage Imbalance Enable	Yes or No	
Voltage Imbalance Timeout	10-30s max	20s

B. Repetitive accuracy of all settings shall be within 1% at +25C.

C. Voltage and frequency settings shall be field adjustable in 1% increments either locally with the display and keypad or remotely via RS-485 communications port access.

D. Source status screens shall be provided for both normal & emergency to provide digital readout of voltage and frequency.

E. The backlit graphical display shall have multiple language capability. Languages can be selected from the user interface.

3.03 Time Delays

A. A **Line Interrupt** delay shall be provided to override momentary normal source outages, delay all transfer and engine starting signals; adjustable 0 to 120 seconds. It shall be possible to bypass the time delay from the controller user interface.

B. An **Engine Warm Up** delay shall be provided for extended engine RPM stabilization where fast transfer to the emergency source is not required; adjustable 0 to 1,800 seconds. It shall be possible to bypass the time delay from the controller user interface.

C. A **Transfer to Emergency** delay shall be provided for controlled sequencing of loads to the emergency source; adjustable from 0 to 120 seconds. It shall be possible to bypass the time delay from the controller user interface.

D. A **Retransfer to Normal** delay shall be provided to ensure stability of the normal source, adjustable from 0 to 1,800 seconds. Time delay shall be automatically bypassed if the emergency source fails and normal source is acceptable.

E. An **Engine Minimum Runtime** delay shall be provided to reduce nuisance starts when the normal source power is unstable but does not trigger a transfer to the emergency source, adjustable from 5 to 30 minutes. Operates in conjunction with Engine Cool Down delay.

F. An **Engine Cool Down** delay shall be provided; adjustable 300 – 1,800 seconds.

G. A **Delayed Transition** delay shall be provided to ensure sufficient time for motor voltage decay for transition between live sources; adjustable from 0 – 120 seconds.

H. An **Elevator Signal Before Transfer** output signal shall be provided to drive an external relay for selective load disconnect control. The controller shall have the ability to activate an adjustable 0 to 120 second delay in any of the following modes:

1. Prior to transfer only.
2. Prior to and after transfer.
3. Normal to emergency only.
4. Emergency to normal only.
5. Normal to emergency and emergency to normal.
6. All transfer conditions or only when both sources are available.

I. For special applications (i.e., three sources), the option to select the **Preferred Source**.

J. All adjustable time delays shall be field adjustable without the use of special tools or software.

Time Delay Summary Table:

Time Delay Description	Range	Default Value
Line Interrupt Delay	0 – 120 sec.	3 sec.
Engine Warm Up Delay	0 – 1,800 sec.	3 sec.
Transfer to Emergency	0 – 120 sec.	3 sec.
Retransfer to Normal	0 – 1,800 sec.	1,800 sec.
Engine Minimum Run Time	5 – 30 min.	5 min.
Engine Cool Down	300 – 1,800 sec.	1,800 sec.
Delayed Transition (Center Off Position)	0 – 120 sec.	120 sec.
Elevator Signal Before Transfer	0 – 120 sec.	0 sec.
Preferred Source	Normal (S1), Emerg. (S2)	Normal (S1)

3.04 External Control Interfaces and Indicators

A. Communications connectors, user interface and display shall be accessible and usable without presenting an
arc-flash hazard.

B. Customer inputs shall be optically isolated for wider compatibility with external systems. This will protect the controller from external surges and transient voltages.

C. Surge Protection for the ATS controls shall be provided.

D. Replaceable fuses to protect the power supply to the ATS control panel.

E. A set of contacts rated 5 amps, 30 VDC shall be provided for a low-voltage **engine start** signal. The start signal shall prevent dry cranking of the engine by requiring the generator set to reach proper output and run for the duration of the Engine Minimum Runtime setting, regardless of whether the normal source restores before the load is transferred.

F. Engine starting contacts shall facilitate start-circuit monitoring to comply with the 2017 and later versions of NFPA 70 Article 700.10 (D)(3).

G. Two sets of Form-C auxiliary contacts rated 10 amps, 250 VAC shall be provided to indicate the switch actuator position, including center-off for Time Delay Neutral switches or a Permissive (Emergency Inhibit) condition.

H. A single **General Alarm** (summary alarm) indication shall light up the alert indicator and de-energize the configured common alarm output relay for external monitoring.

I. LED indicating lights shall be provided; one to indicate when the ATS is connected to the normal source and one to indicate when the ATS is connected to the emergency source.

J. LED indicating lights shall be provided and energized by controller outputs. The lights shall provide true source availability of the normal and emergency source, as determined by the voltage sensing trip and reset settings for each source.

K. LED indicating light shall be provided to indicate switch not in automatic mode (manual).

L. LED indicating light shall be provided to indicate any alarm condition.

M. The controller shall have two programmable inputs and one programmable output as standard; with an optional expansion board to add up to four programmable input/outputs. Programmable I/O conditions shall include:

Programmable Output	Programmable Input
Source 1 – Two Wire Start	Permissive (Emergency Inhibit)
Source 2 – Two Wire Start	Remote Engine Fast Test
Engine Exercising	Remote Engine Normal Test
Engine Warmup	ATS Timer
Signal Before Transfer	Initiate Demand Response
General Alarm	
Source 1 Good	
Source 2 Good	

N. System Status - The controller LCD display shall include a System Status screen which shall be accessible from any point in the menu system by depressing the “ESC” key until you arrive at the System Status screen. This screen shall display a clear description of the active operating sequences and switch position. Operational status information displayed shall include:
   1. Source 1 status (good or bad)
   2. Source 2 status (good or bad)
   3. Any active timer
   4. Permissive (Emergency Inhibit when active)

3.05 Transfer and Exercise Controls

The following standard features shall be built into the controller, capable of being activated through keypad programming as required by the user:

A. Provide the ability to select "commit/no commit to transfer" to determine whether the load should be transferred to the emergency generator if the normal source restores before the generator is ready to accept the load.
B. An engine generator exercising timer shall be provided to configure daily, day of week, weekly, bi-weekly, or monthly testing of an engine generator set at a specified time of day with or without load for a programmable period (Engine Minimum Runtime).
C. Terminals shall be provided for a remote contact to signal the ATS to transfer to emergency for remote test. Test signal can be enabled through the keypad or digital input. Transfer to emergency for demand response can be enabled by digital input.
D. **For In-Phase Transfer Switch Designs:** An in-phase monitor shall be provided in the controller such that the transfer occurs with less than ten degrees phase angle difference between sources. The monitor shall control transfer so that motor load inrush currents do not exceed normal starting currents and shall not require external control of power sources. In-phase switch transfer time shall not exceed 25ms.
E. **For Delayed Transition Transfer Switch Designs:** Terminals shall be provided for a remote contact to signal the ATS to load-shed (Permissive is removed) and move to a center-off position. When the load-shed signal is removed (Permissive is restored), the ATS shall reclose to the emergency. If normal source is good during load-shed the ATS shall transfer to and remain on normal source.

3.06 Data Logging and Diagnostics

Controllers that require multiple screens to determine system status or display "coded" system status messages, which must be explained by references in the operator's manual are not permissible.

A. Controller & Contactor Health Monitoring with visual and auxiliary contact status shall be provided.
B. Communications Interface – The controller shall be capable of interfacing, through a standard RS-485 serial communication port with a network of transfer switches.
C. Data Logging – The controller shall have the ability to log data and to maintain the last 200 events, even in the event of total power loss. The following events shall be time and date stamped and maintained in a non-volatile memory:

1. Date, time and reason for transfer normal to emergency.
2. Date, time and reason for transfer emergency to normal.
3. Date, time and reason for engine start.
4. Date and time engine stopped.
5. Date and time emergency source available.
6. Date and time emergency source not available.

PART 4 ADDITIONAL FEATURES AND ACCESSORIES

4.01 Additional Optional Features

A. Line Interrupt Time Delay. An extended time delay on engine starting shall be provided. Adjustable from 0 to 120 seconds. Default set at 3 seconds.

B. Integrating Metering with current transformer. - Not Selected

C. Manual Retransfer to Generator. - Not Selected

D. Permissive (Emergency Inhibit). - Not Selected

E. Chicago Toolkit. - Not Selected

F. Expanded Input/Output Module. - Not Selected

G. Pad lockable controller cover (Standard on NEMA 3R). Pad lockable user interface cover shall be provided with the ability to protect the user interface from the environment

H. Temperature and Humidity Controlled Heater for NEMA 1. An enclosure heater strip shall be supplied inside the transfer switch enclosure and shall be controlled by an adjustable humidistat.

I. Transient Voltage Surge Suppressor – A TVSS shall be provided with a surge current rating of 80ka per phase, high-performance EMI/RFI filtering, LED status indication via solid state diagnostics plus remote indication contacts, built-in audible alarm, thermal and short circuit fusing and a short circuit current rating: 200k AIC, UL 1449 3rd Edition Listed, UL1449 Type 2 SPD, In=20kA

PART 5 ADDITIONAL REQUIREMENTS

5.01 Withstand and Closing Ratings

A. The ATS shall be rated to close on and withstand the available RMS symmetrical short circuit current at the ATS terminals with the type of overcurrent protection shown on the plans. The basis of design for this project is a Generac TX Series Service Entrance Rated Automatic Transfer Switch with a 125kaic WCR Breaker Rating transfer switches from other manufacturers with ratings less than provided in this section will need to be approved by the Consulting Engineer to ensure compatibility with the project.

B. Provide a temperature and humidity controlled anti-condensation heater for all NEMA 3R and 4X enclosed units. Heater shall be an available option on NEMA 1 enclosures, when called for on plans. Heater cover to indicate a hot surface.

C. The switch mechanism and controller shall be easily removable from the enclosure in the field. This requirement will facilitate easy single-person installation on wall mounted switches, conduit fitting, and cable pulling while minimizing risk of damage and/or contamination of ATS components during the installation process.

D. Controller human interface and USB port shall be visible and operational through the enclosure door, without the need for personal protective equipment, avoiding arc-flash hazard for routine checks of the controller status.

5.02 Tests and Certification

A. The complete ATS shall be factory tested to ensure proper operation of the individual components and correct overall sequence of operation and to ensure that the operating transfer time, voltage, frequency, and time delay settings are in compliance with the specification requirements.

B. The ATS manufacturer shall be certified to ISO 9001: 2015 International Quality Standard and the manufacturer shall have third party certification verifying quality assurance in design/development, production, installation, and servicing in accordance with ISO 9001: 2015.

5.03 Service Representation

A. The ATS manufacturer shall support a service organization of company-employed personnel located throughout the contiguous United States. The service center's personnel must be factory trained and must be on call 24 hours a day, 365 days a year.

B. The manufacturer shall maintain records of switch shipments, by serial number, for a minimum of 10 years.

5.04 Warranty

A. The basis of design is a Generac TX Series Service Entrance Rated Automatic Transfer Switch Comprehensive 5 Year Warranty.

B. A Basic Warranty is defined as the manufacturer covering replacement parts for the listed amount of the warranty period.

C. The Comprehensive Warranty is defined as the manufacturer covering replacement parts, labor, and limited technician travel costs for covered warranty repairs during the listed warranty period.

D. The switch mechanism and controller shall be easily removable from the enclosure in the field. This requirement will facilitate easy single-person installation on wall mounted switches, conduit fitting, and cable pulling while minimizing risk of damage and/or contamination of ATS components during the installation process.

E. Controller human interface and USB port shall be visible and operational through the enclosure door, without the need for personal protective equipment, avoiding arc-flash hazard for routine checks of the controller status.

End of Section

SECTION 264500

GROUNDING

PART I - GENERAL

1.1 DESCRIPTION - This section describes general requirements, products and methods of execution relating to the furnishing and installation of a grounding system complete as required for this project.

1.2 MINIMUM REQUIREMENTS - The minimum requirements for the system shall conform to NEC Article 250.

1.3 SPECIAL REQUIREMENTS - Unless specified elsewhere, the ohmic values for grounds and grounding systems shall be as follows:

- A. For grounding metal enclosures and frames for electrical and electrically operated equipment -- 5Ω maximum.
- B. For grounding systems to which electrical utilization equipment and appliances are connected -- 5Ω maximum.
- C. For grounding secondary distribution systems, neutrals, non-current carrying metal parts associated with distribution systems, and enclosures of electrical equipment not normally within reach of other than authorized and qualified electrical operating and maintenance personnel -- 10Ω maximum.
- D. For individual transformer and lightning arrester grounds on distribution systems -- 10Ω maximum.
- E. For equipment not covered in the above -- 10Ω maximum.

PART II - PRODUCTS

2.1 GENERAL - All grounding conductors, ground rods, and equipment required for ground systems shall be in accordance with UL 467.

2.2 GROUND RODS - 3/4" copper clad steel, 10' or longer. (VFC No. 3410 or equivalent).

2.3 GROUNDING CONDUCTORS

- A. Buried conductors between ground rods shall be rope lay, copper wire with (28) strands of #14 AWG.
- B. Service ground conductor shall be bare copper sized in accordance with NEC Table 250-94.
- C. Water piping ground jumper conductors shall be bare, stranded copper, #4/0 AWG.
- D. Telephone backboard grounding conductor shall be bare stranded copper, #4/0 AWG.
- E. Equipment and wiring device grounding conductors shall be as follows:
  1. Have green insulation of a type identical to circuit conductors serving the loads.
  2. Be sized the same as circuit conductors for wiring devices.
  3. Be sized in accordance with NEC Table 250-95 for equipment.

PART III - EXECUTION

3.1 "MAN-MADE" GROUNDS - Man-made ground shall consist of three ground rods in a triangular pattern connected with a continuous ground wire sized per NEC. The man-made ground shall be tested with an approved measuring device, such as "Vibroground", in order to verify that resistance does not exceed the specified level. Furnish certified test results.

3.2 EQUIPMENT AND WIRING DEVICE GROUND

- A. Install grounding conductors for all equipment and wiring devices. Do not rely on conduit for grounding path.

B. Multiple circuits sharing a single raceway may share a single grounding conductor as long as it is sized for the largest circuit or wire size and all circuits originate in the same panel.

C. Multiple circuits sharing a single raceway may share a single grounding conductor if all of the following requirements are met:
   1. All circuits originate in the same panel.
   2. No more than three single pole circuits may share a ground conductor.
   3. Size ground conductor for largest circuit.

End of Section

APPENDIX B

PROJECT DRAWINGS - Generator

Design Intent:

1 - New Emergency Generator and Automatic Transfer Switch is sized to accommodate the existing exterior mounted main distribution switchgear "MDP" and shall replace the existing generator.

2 - The existing 30kW emergency generator shall be removed after all new work is complete. This generator serves existing panel "EP". The feed to panel "EP" shall be reconnected directly to panel "MDP" without the existing 100A automatic transfer switch.

3 - The existing 30kW emergency generator and 100A ATS shall be removed by the contractor and retained for reuse by the owner. Coordinate all removal work with owner.

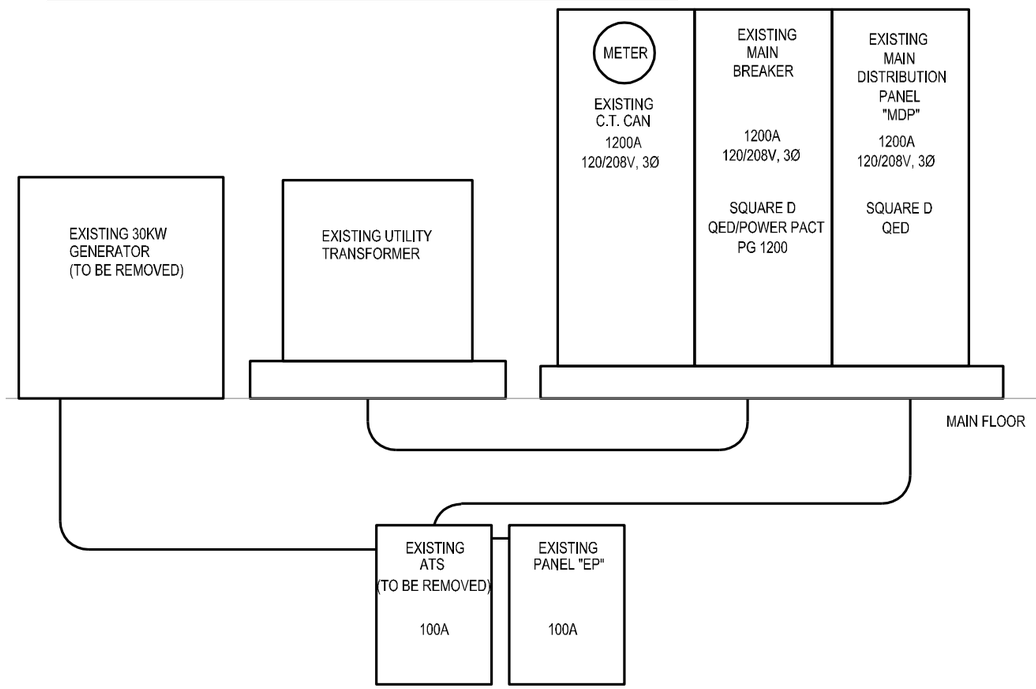

1 / E1 EXISTING POWER RISER DIAGRAM

NO SCALE

NOTES: REVISED POWER RISER

- (A) 3 SETS OF 4#500 AND 1#3/0 GROUND IN 3-3 1/2" CONDUITS.
- (B) RECONNECT EXISTING FEEDERS TO PANEL "EP" FROM "MDP" DIRECTLY, AFTER 100A AUTOMATIC TRANSFER SWITCH IS REMOVED.
- (C) EXTEND 4#6 AND 1#10 GRD IN 1" CONDUIT FROM NEW BREAKER IN "MDP" TO GENERATOR PANEL.
- (D) PROVIDE NEW 50A/3P BREAKER IN MDP FOR GEN. PANEL.
- (E) PROVIDE CONCRETE PAD IN LINE WITH SERVICE EQUIPMENT PAD FOR ATS INSTALLATION.

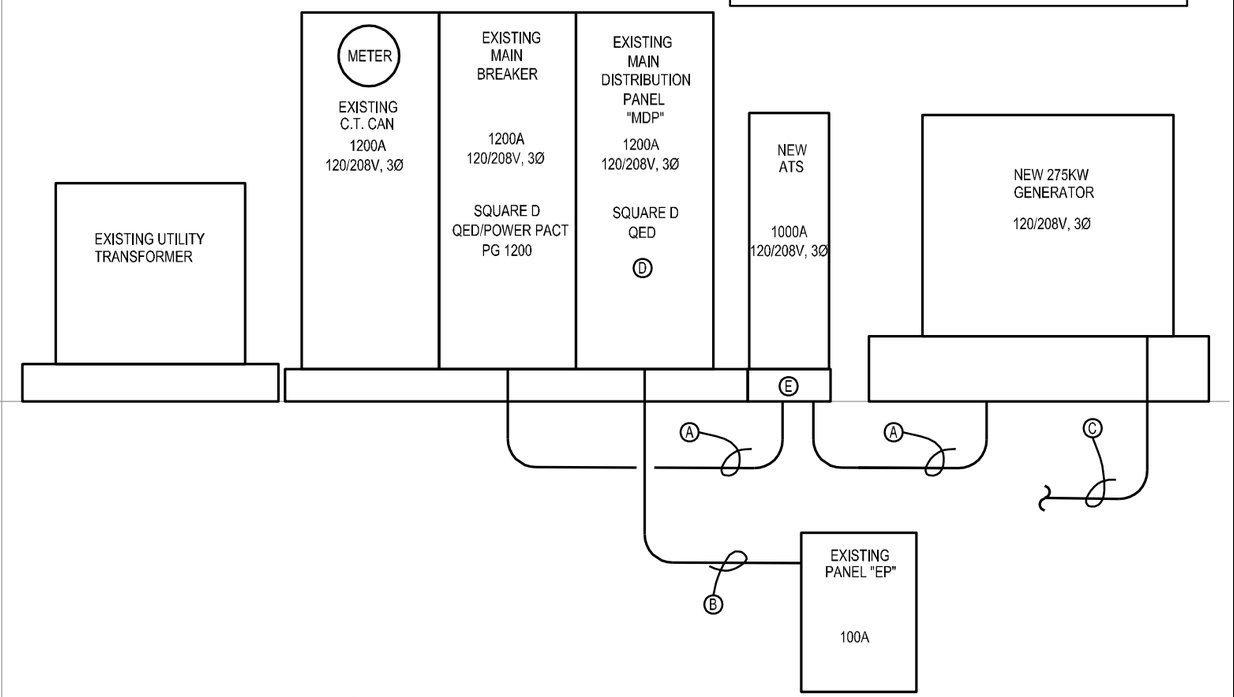

2 / E1 REVISED POWER RISER DIAGRAM

NO SCALE

Contractor's Use of Site and Premises:

1. Restricted Use of Site: Contractor shall have limited use of Project site for construction operations as indicated on Drawings by the Contract limits and as indicated by requirements of this Section.
2. Driveways, Walkways, and Entrances: Keep driveways, loading areas and entrances serving premises clear and available to Owner, Owner's employees, and emergency vehicles at all times. Do not use these areas for parking or for storage of materials. DO NOT BLOCK FIRE EXITS, TYPICAL TRAVEL PATHS FOR MILITARY EQUIPMENT OR EMERGENCY EXITS.
3. All work must be coordinated with the Owner at all times and Owner must be informed about any work scheduling 48 hours in advance of work being conducted and shall require Owner's written approval.
4. Any electrical system shutdowns and shutdown durations shall be coordinated with the owner, in writing, 2 weeks in advance of anticipated shutdown. Writing notice to proceed shall be received from the owner prior to beginning any work.
5. The Contractor shall protect existing building and site structures from any and all damage during this work and if damages occur shall repair same to its original condition as approved by the Owner.
6. The Contractor shall confine his apparatus, the storage of materials and the operation of his workmen to limits by law, ordinances, permits or direction of the Owner and shall not unreasonably encumber the premises with materials.
7. The Contractor shall not load or permit any part of any structure to be loaded with weights that will endanger the building or its occupants. Note that the existing piping distribution tunnels are not strong enough to run any equipment over. These areas are clearly defined on the site plan. Plan work to avoid having to cross these areas.
8. Contractor and Owner shall establish a staging area for storage of materials and equipment.
9. The Contractor and all workers entering the site shall check in with the Owner as well as the building manager each day prior to entering the site or beginning any work.
10. Do not unreasonably encumber the site with materials or equipment. Confine stockpiling of materials to the areas designated by the Owner. If additional storage is necessary, obtain and pay for such storage off-site.
11. All precautions must be made by the Contractor to insure full and proper safety of all building personnel, workers, and related peoples as well as construction personnel and its related people. All application, material handling, and associated equipment shall conform to and be operated in conformance with OSHA safety requirements. Comply with Federal, State, Local and Owner fire and safety requirements.
12. The Contractor shall erect and maintain, as required by law, conditions and progress of the work, warning signs, barricades and other reasonable safeguards for safety and protection.
13. The Contractor is to coordinate with the Owner for the location of Job Site Trailer Office if required.
14. Existing Premises Conditions: The Contractor is responsible for adequately documenting the existing condition of the premises, specifically the condition of the ceiling systems and cleanliness of areas. Any damage to the premises which is found after construction and is not so documented will be the responsibility of the Contractor to repair or replace.

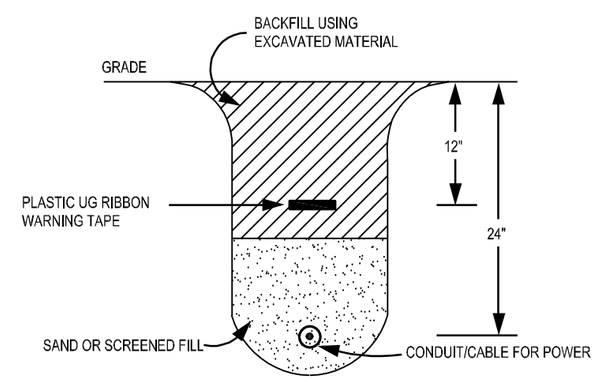

3 / E1 ELECTRICAL TRENCH DETAIL

NO SCALE

MONTANA SUSAN H. AMES 18872PE LICENSED PROFESSIONAL ENGINEER

LEWIS & CLARK COUNTY
PUBLIC WORKS, BUILDING DIVISION

MURRAY BUILDING EMERGENCY GENERATOR
1930 9TH AVENUE, HELENA, MT

AMES ENGINEERING, LLC
815 JADE STREET
HELENA, MT 59602
PHONE/FAX: (406) 458-0494
E-MAIL: susanhames@mt.net

DRAWN BY: SHA
CHECKED BY: SHA
DATE: 2/05/25
JOB #: X450.2401
FILE: E1
SHEET CONTENTS:
EXISTING AND NEW POWER RISER DIAGRAMS, DESIGN INTENT

REVISIONS

E1

SHEET 1 OF 2

1
E2

MAIN FLOOR PLAN - EQUIPMENT LOCATIONS

1/16" = 1'-0"

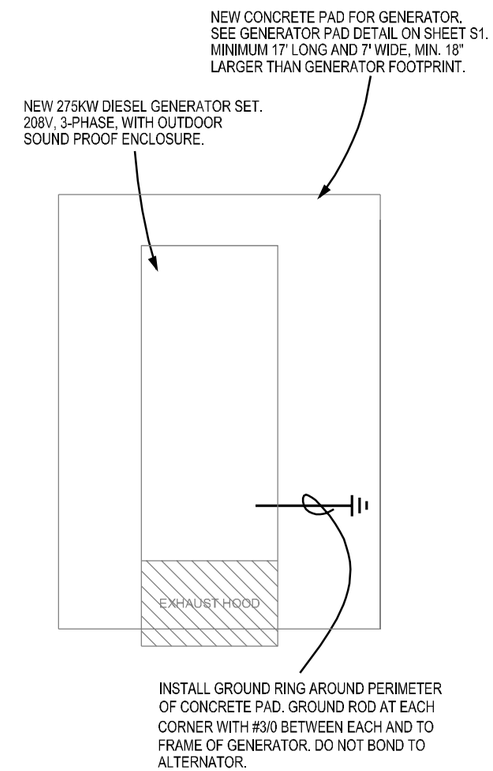

2
E2

GENERATOR PAD DETAIL

NO SCALE

MONTANA
SUSANNA HARTSHORN
LICENSED
PROFESSIONAL ENGINEER

LEWIS & CLARK COUNTY
PUBLIC WORKS, BUILDING DIVISION

MURRAY BUILDING EMERGENCY GENERATOR
1930 9TH AVENUE, HELENA, MT

AMES
ENGINEERING, LLC
815 JADE STREET
HELENA, MT 59602
PHONE/FAX: (406) 458-0494
E-MAIL: susanhames@mt.net

DRAWN BY: SHA
CHECKED BY: SHA
DATE: 2/05/25
JOB #: X450.2401
FILE: E2
SHEET CONTENTS:
EXISTING MAIN FLOOR PLAN

REVISIONS

E2
SHEET 2 OF 2

APPENDIX C

PROJECT DRAWINGS
Concrete Pad Section

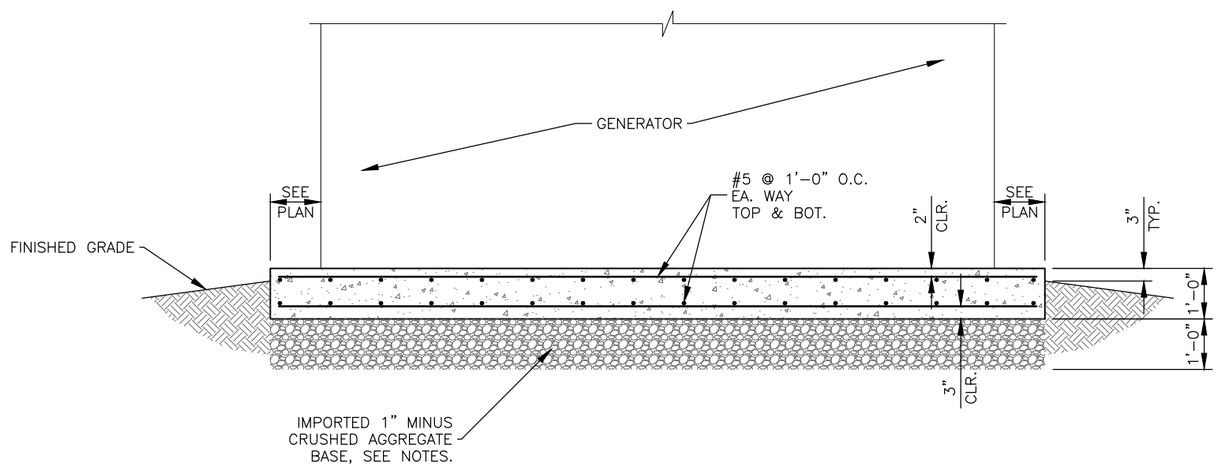

GENERATOR PAD SECTION

SCALE: NO SCALE

NOTES:

1. SLAB TO UTILIZE MPW CLASS M-4500 CONCRETE WITH MINIMUM 28 DAY STRENGTH OF 4,500 PSI. ADD AIR ENTRAINMENT AT 5-8%. CONTRACTOR TO PROVIDE CONCRETE MIX DESIGN FOR APPROVAL A MINIMUM OF 14-DAYS PRIOR TO SCHEDULED POUR. TOP OF PAD TO BE SMOOTH, LEVEL TO MEET SUPPLIER SPECIFICATIONS. CHAMFER ALL EXPOSED SURFACES.
2. REINFORCING STEEL TO BE GRADE 60.
3. THE TOP 12" OF SUBGRADE BENEATH THE SLAB SHALL BE REPLACED WITH 1" MINUS CRUSHED BASE AGGREGATE MATERIAL AND THOROUGHLY COMPACTED TO 95% OF MAXIMUM DENSITY PER ASTM D698. NO FROZEN BACKFILL SHALL BE USED. COMPACT NATIVE MATERIAL BELOW IMPORTED BASE MATERIAL. IF CLAYS, SILTS OR ORGANICS ARE OBSERVED CONTACT THE ENGINEER. CONTRACTOR TO PROVIDE QUALITY CONTROL TESTING FROM AN INDEPENDENT CERTIFIED TESTER TO ENSURE COMPACTION MEETS SPECIFICATIONS. MINIMUM OF TWO COMPACTION TESTS REQUIRED ON BASE MATERIAL.
4. ENSURE CONNECTIONS TO THE UNIT ARE CAPABLE OF ACCOMODATING THE EXPECTED MOVEMENT FROM FREEZE THAW POTENTIAL.
5. COORDINATE WITH UTILITIES TO AVOID CONFLICTS AND ALLOW ANY AND ALL INSPECTIONS BEFORE, DURING AND AFTER CONSTRUCTION OF PAD.
6. CONTRACTOR TO RELOCATE OR REPLACE CONFLICTING SPRINKLER IRRIGATION LINES.

NO.	REVISION DESCRIPTION	BY	DATE

PROJECT: 1-24214
DESIGNED: KFY
DRAWN: PKS
CHECKED: KFY
APPROVED: KFY
DATE: DECEMBER, 2024

MONTANA KARL F. YAUNICH CLASS PE 12/6/24 PROFESSIONAL ENGINEER LICENSED

GreatWest ENGINEERING
2501 BELT VIEW DRIVE
HELENA, MT 59601
(406)449-8627

LEWIS AND CLARK COUNTY
PUBLIC WORKS, BUILDING DIVISION
MURRAY BUILDING EMERGENCY GENERATOR
1930 9TH AVENUE, HELENA, MY

GENERATOR PAD SECTION AND NOTES

SHEET NO.
S1

Y:\Shared\Helena Projects\1-24214-Lewis and Clark County Ames Generator\CADD X-XXXXX\Sheets\1-24214_Lewis and Clark Generator Pad.dwg

Bid Award. Rimini Water Distribution Services Invitation for Bids. (Casey Hayes)

Presented By:

Summary:
The Commissioners will consider awarding the bid.

Legal Review Required:

ATTACHMENTS:

Description	Type
Staff Report for Rimini Bid Award	Staff Report

Grants and Purchasing Department
Lewis and Clark County

406 Fuller Ave. Room 361 Helena, MT 59623
Phone: (406) 447-8383 Fax: (406) 447-8398
e-mail: grants@lccountymt.gov

STAFF REPORT

Date: Monday, March 3, 2025
To: Board of County Commissioners
From: Casey Hayes, Purchasing Officer
RE: Bid Award of Rimini Water Distribution Services IFB

County Commission Hearing: **Thursday, March 6, 2025 --- 9:00 AM**

I. EXECUTIVE SUMMARY:

On February 27, 2025 one bid was unsealed for the Rimini Water Distribution Services Invitation for Bids. The project generally consists of distribution of potable drinking water to the residents of Rimini, Montana.

Upon tabulation of the bid, it was determined that Big Spring Water of Bozeman, Montana was the sole responsive and responsible bidder.

II. REQUEST:

Award the bid to Big Spring Water of Bozeman, Montana for a total bid amount of twenty-five thousand nine hundred thirty-five dollars ($25,935.00) and authorize the Chair to sign all applicable contract documents.

III. STAFF RECOMMENDATION:

Approval

IV. ATTACHMENTS:

Notice of Award